The City of Philadelphia

PLUMBING CODE 2004

FOURTH PRINTING

(SUBCODE "P" OF TITLE 4,
THE BUILDING CONSTRUCTION AND OCCUPANCY CODE
OF THE CITY OF PHILADELPHIA)

Portions of this publication reproduce excerpts from the
2009 International Plumbing Code,
International Code Council, Inc., Washington D.C.
Reproduced with permission. All rights reserved.
(www.iccsafe.org)

[THIS PAGE IS INTENTIONALLY BLANK]

HISTORY

This document contains the ordinance and regulations that together form the *Philadelphia Plumbing Code*. It is incorporated as Subcode "P" of the *Philadelphia Building Construction and Occupancy Code* (BCOC), which comprises Title 4 of *The Philadelphia Code*. The code is printed here in its entirety.

The first edition of the *Philadelphia Plumbing Code* in revised form was developed as part of a major reformatting and update effort with the first printing in October 1995 and the second printing as a Subcode of the BCOC in 1997. It represented the first major rewrite since the original *Philadelphia Plumbing Code* adopted by the Department of Licenses and Inspections in 1961.

This second edition is the result of revisions proposed by the Philadelphia Plumbing Advisory Board since the first edition and is intended to equal or exceed the plumbing provisions of the Pennsylvania Uniform Construction Code.

The Plumbing Code is developed as a member of a family of subcodes that together address all matters relating to the construction and occupancy of buildings and other structures. Together with the Building, Electrical, Energy Conservation, Existing Building, Fuel Gas, Mechanical, Performance, Residential and Zoning Codes, it regulates construction, additions, alterations and changes of occupancy classification. The Fire and Property Maintenance Codes are developed to provide for continuing responsibility to ensure that the many safeguards for the protection of life, welfare and health required by the family of codes are properly maintained.

The bulk of administrative provisions are deferred to *the Philadelphia Administrative Code*, which is a single regulatory document that incorporates ordinances and regulations to administer the eleven technical subcodes in the BCOC. The Administrative subcode is a necessary companion to the Plumbing subcode in order to properly use and apply it.

Effective January 1, 2004

Printed in the United States of America
First edition first printing: October, 1995
First edition second printing: June, 1997
Second edition first printing: January, 2004
Second edition second printing: January, 2007
Second edition third printing: August 2010
Second edition fourth printing: April 2012

NOTE TO READERS OF THE PHILADELPHIA PLUMBING CODE

Portions of this publication reproduce excerpts from the *2009 International Plumbing Code*, with permission from the International Code Council, Inc., Washington D.C. All rights reserved. (www.iccsafe.org)

A number of features are incorporated into the *Philadelphia Plumbing Code* for the convenience of the user.

Definitions of terms are located alphabetically within Chapter 2.

An indenting feature is used in tandem with the code's decimal-based section numbering system to clearly indicate the hierarchy of each subsection. The numbering system enables the code user to know immediately the section to which a subsection is subordinate, since each subsection begins with the main section number, which is keyed to the chapter number.

In Chapter 1 and Appendix A, official regulations are printed within the section or subsection under which they were promulgated. This location style provides code users with a single source for all requirements pertaining to a topic. Regulations are printed with the designation "(R)" behind the section number to distinguish them from ordinance text.

The remainder of the code – Chapters 2 through 16 – consists entirely of regulation and has been printed without the "(R)" designation for simplicity.

Provisions for the licensing of the plumbing trade are located in Title 9 "Regulation of Businesses, Trades and Professions" of The Philadelphia Code. The text of the licensing portion of the ordinance and related regulations is printed in Appendix A of this code.

Graphics have been referred to as "Figures" in various locations in the code as an aid to the user. These figures are not part of the ordinance or related regulations and are located within this publication code, only as explanatory or clarifying information.

In this document, all section numbers contain the prefix "P-" before the designated numerical section number and all page numbers contain the prefix "P-".

Readers of the *Philadelphia Plumbing Code* are urged to notify the Philadelphia Department of Licenses and Inspections if they discover any errors in the printing of this Code. Contact: Code Administration Unit, Department of Licenses and Inspections, 11th Floor, Municipal Services Building, 1401 John F. Kennedy Blvd., Philadelphia, Pennsylvania 19102.

PLUMBING CODE
TABLE OF CONTENTS

CHAPTER 1 ADMINISTRATION 1
SECTION P-101 GENERAL 1
SECTION P-102 APPLICABILITY 1
SECTION P-103 PERMITS 1
SECTION P-104 SUBCONTRACTORS 2
SECTION P-105 UNLICENSED PERSONS 2
SECTION P-106 PLUMBING REGULATIONS 2
CHAPTER 2 DEFINITIONS 3
SECTION P-201 GENERAL 3
SECTION P-202 GENERAL DEFINITIONS 3
SECTION P-203 ABBREVIATIONS 7
CHAPTER 3 MATERIALS 9
SECTION P-301 GENERAL REQUIREMENTS 9
SECTION P-302 NEW MATERIALS, FIXTURES AND METHODS 9
SECTION P-303 IDENTIFICATION 9
SECTION P-304 CAULKING FERRULES 9
SECTION P-305 MATERIALS FOR PLUMBING INSTALLATIONS 9
CHAPTER 4 JOINTS 13
SECTION P-401 GENERAL REQUIREMENTS 13
SECTION P-402 THREADED JOINTS 13
SECTION P-403 CAULKED JOINTS 13
SECTION P-404 GASKET TYPE JOINTS 13
SECTION P-405 SOLDERED OR SWEATED JOINTS 13
SECTION P-406 FLARED JOINTS 13
SECTION P-407 CLAY AND CONCRETE SEWER PIPE JOINTS 13
SECTION P-408 BRAZED JOINTS 14
SECTION P-409 STANDARD JOINTS 14
SECTION P-410 PROHIBITED JOINTS 14
SECTION P-411 PERMITTED JOINTS 14
CHAPTER 5 TRAPS, CLEANOUTS, INTERCEPTORS, AND BACKWATER VALVES 17
SECTION P-501 GENERAL REQUIREMENTS FOR TRAPS 17
SECTION P-502 HOUSE TRAPS AND FRESH AIR INLETS 20
SECTION P-503 FRESH AIR INLETS 20
SECTION P-504 LAVATORY AND SINK TRAPS 20
SECTION P-505 BATH TRAPS 20
SECTION P-506 SIZES OF FIXTURE TRAPS AND FIXTURE DRAINS 20
SECTION P-507 CLEANOUTS 21
SECTION P-508 INTERCEPTORS AND SEPARATORS 22
SECTION P-509 OIL INTERCEPTORS 24
SECTION P-510 GREASE INTERCEPTORS 25
SECTION P-511 HAIR AND LINT INTERCEPTORS 25
SECTION P-512 SAND INTERCEPTORS 25
SECTION P-513 GARBAGE GRINDERS 25
SECTION P-514 BACKWATER VALVES 26
CHAPTER 6 PIPE SUPPORTS 27
SECTION P-601 VERTICAL PIPING 27
SECTION P-602 HORIZONTAL PIPING 27
SECTION P-603 HANGERS AND ANCHORS 27
SECTION P-604 STRESS AND STRAIN 28

SECTION P-605 PROTECTION OF PIPING 28
SECTION P-606 ABANDONED PIPING 28
SECTION P-607 FREEZING PROTECTION 28
SECTION P-608 RODENT PROTECTION 28
CHAPTER 7 PLUMBING FIXTURES 29
SECTION P-701 NUMBER OF FIXTURES 29
SECTION P-702 QUALITY OF FIXTURES 29
SECTION P-703 ALTERNATE MATERIALS 29
SECTION P-704 OVERFLOWS 29
SECTION P-705 INSTALLATION 29
SECTION P-706 WATER CLOSETS 31
SECTION P-707 URINALS 31
SECTION P-708 BATHROOM AND TOILET ROOM REQUIREMENTS 32
SECTION P-709 (*RESERVED*) 32
SECTION P-710 LAVATORIES 32
SECTION P-711 SHOWERS 32
SECTION P-712 SINKS 32
SECTION P-713 DRINKING FOUNTAINS 33
SECTION P-714 FLOOR DRAINS 33
SECTION P-715 AREA DRAINS 33
SECTION P-716 PROHIBITED FIXTURES 34
SECTION P-717 USED MATERIALS 34
SECTION P-718 TEMPORARY SANITARY FACILITIES 34
SECTION P-719 SWIMMING POOLS 34
SECTION P-720 WATER CONSERVATION 35
CHAPTER 8 WATER SUPPLY AND DISTRIBUTION 37
SECTION P-801 WATER SYSTEMS 37
SECTION P-802 QUALITY OF WATER SUPPLY 37
SECTION P-803 ADEQUATE SUPPLY 37
SECTION P-804 CROSS CONNECTIONS 37
SECTION P-805 UNDERGROUND WATER PIPE 38
SECTION P-806 BACKFLOW PROTECTION 38
SECTION P-807 PUMPS, WELLS, AND OTHER APPLIANCES 38
SECTION P-808 WATER SUPPLY TANKS 39
SECTION P-809 MATERIAL FOR WATER PIPE, TUBING AND FITTINGS 39
SECTION P-810 WATER PIPING AND SHUT-OFF VALVES 40
SECTION P-811 WATER SUPPLY FIXTURES 41
SECTION P-812 TEMPERATURE AND PRESSURE RELIEF VALVES 43
SECTION P-813 INTERMEDIATE SHUT-OFFS 43
SECTION P-814 CHECK VALVES 43
SECTION P-815 RELIEF OUTLET CONNECTIONS 44
CHAPTER 9 SOIL AND WASTE PIPING 46
SECTION P-901 GENERAL REQUIREMENTS 46
SECTION P-902 MATERIALS 46
SECTION P-903 INSTALLATIONS 47
SECTION P-904 SIZES 48
SECTION P-905 SUMPS AND RECEIVING TANKS 54
SECTION P-906 CONDENSATE AND BLOWOFF CONNECTIONS 55
SECTION P-907 HYDRAULICALLY OPERATED EQUIPMENT 55
CHAPTER 10 STORM WATER DRAINAGE PIPING 56
SECTION P-1001 GENERAL REQUIREMENTS 56
SECTION P-1002 EXPANSION JOINTS 57
SECTION P-1003 SUBSOIL DRAINS 57
SECTION P-1004 PROHIBITED DRAINAGE 58
SECTION P-1005 MATERIALS 58

SECTION P-1006 SIZE OF LEADERS AND STORM DRAINS 58
CHAPTER 11 VENTS AND VENTING 62
SECTION P-1101 VENTING 62
SECTION P-1102 MATERIALS 63
SECTION P-1103 PROTECTION OF TRAP SEALS 64
SECTION P-1104 VELOCITY BREAKS IN BUILDINGS OVER 30 STORIES 65
SECTION P-1105 VENTILATION OF BRANCH OR HORIZONTAL PIPES 67
SECTION P-1106 EJECTOR FRESH AIR INLETS AND VENTS 73
SECTION P-1107 VENTING OF OFFSETS 73
SECTION P-1108 VENT HEADERS 75
SECTION P-1109 VENT PIPE GRADES AND CONNECTIONS 76
SECTION P-1110 SIZE, LENGTH AND NUMBER OF VENTS AND FRESH AIR INLETS 76
CHAPTER 12 INDIRECT AND SPECIAL WASTE 80
SECTION P-1201 REQUIRED INDIRECT WASTE 80
SECTION P-1202 INDIRECT WASTE PIPES 81
SECTION P-1203 SEWAGE AND INDUSTRIAL WASTE 82
SECTION P-1204 VENTING OF INDIRECT WASTE 83
SECTION P-1205 SPECIAL WASTES 84
CHAPTER 13 INDIVIDUAL WATER SUPPLY SYSTEMS 86
SECTION P-1301 PERMITS 86
SECTION P-1302 APPROVAL BY DEPARTMENT OF PUBLIC HEALTH 86
SECTION P-1303 CONSTRUCTION AND INSTALLATION 86
CHAPTER 14 INDIVIDUAL SUBSURFACE SEWAGE DISPOSAL SYSTEMS 88
SECTION P-1401 GENERAL 88
SECTION P-1402 ABANDONED CESSPOOLS 88
CHAPTER 15 INSPECTIONS AND TESTS 90
SECTION P-1501 INSPECTIONS 90
SECTION P-1502 NOTIFICATION 90
SECTION P-1503 MATERIAL AND LABOR TESTS 90
SECTION P-1504 CERTIFICATE OF APPROVAL 90
SECTION P-1505 TEST OF DEFECTIVE OR UNSANITARY PLUMBING 90
SECTION P-1506 TESTING DRAINAGE AND VENT SYSTEMS 91
SECTION P-1507 TEST OF WATER SUPPLY SYSTEMS 91
SECTION P-1508 PAINTING AND COATING 91
CHAPTER 16 MODULAR CONSTRUCTION 92
SECTION P-1601 CODE COMPLIANCE 92
APPENDIX A 94
INDEX 98

[THIS PAGE IS INTENTIONALLY BLANK]

NOTE: This document contains the complete text of the *Philadelphia Plumbing Code.*

CHAPTER 1
ADMINISTRATION

SECTION P-101 GENERAL

P-101.1 Title. These provisions, together with Section 9-1003 of The Philadelphia Code and the regulations adopted pursuant thereto, shall be known as the Philadelphia Plumbing Code, hereinafter referred to as "this code."

P-101.2 Scope. The design, installation, maintenance, alteration and inspection of plumbing systems, including sanitary and storm drainage, sanitary facilities, water supplies, storm water and sewage disposal in buildings and premises shall comply with the provisions of this code and the regulations of the department.

P-101.3 Intent. This code shall be construed to secure its expressed intent, which is to provide for the public health, safety and welfare insofar as they are affected by the installation and maintenance of plumbing systems.

P-101.4 Administrative provisions. This chapter contains those provisions which are unique to the administration of this code. All other administrative provisions applicable to this code are as set forth in the administrative code.

SECTION P-102 APPLICABILITY

P-102.1 General. The provisions of these regulations shall cover all matters affecting or relating to plumbing as set forth in Section P-101.0.

P-102.2 Existing structures. The legal use and occupancy of any structure existing on the effective date of this code January 1, 1996, or for which it has been heretofore approved, shall be permitted to continue without change except as is specifically covered in this code or as deemed necessary by the department to secure the intent of this code.

P-102.3 Alterations, additions and repairs. Alterations, additions and repairs to any plumbing system shall conform to that required for a new plumbing system without requiring the existing plumbing to comply with all the requirements of this code. Alterations, additions and repairs shall not cause an existing plumbing system to become unsafe or adversely affect the performance of the plumbing. Where additions or alterations impose loads on parts of existing systems which exceed those permitted herein, such parts shall be made to comply with this code.

P-102.4 Referenced Codes. Where this code references the administrative, building, electrical, fire prevention, property maintenance or zoning codes, it shall mean the City of Philadelphia Code of such title currently in effect unless specifically stated otherwise.

P-102.5 Referenced standards. The standards referenced in this code shall be considered part of the requirements of this code to the prescribed extent of each such reference. Where differences occur between the provisions of this code and referenced standards, the provisions of this code shall apply.

SECTION P-103 PERMITS

P-103.1 Applications. Applications for plumbing permits shall be submitted by a Registered Master Plumber or his/her authorized agent in accordance with Chapter 3 of the administrative code. All plumbing permit applications shall have the Registered Master Plumbers' seal affixed.

P-103.2 Penalty. Any Registered Master Plumber who fails to secure the proper permits as required by this code and the administrative code shall be subject to having their license suspended or revoked in accordance with the provisions of Chapter 9, Section 9-1003(8) of The Philadelphia Code.

P-103.3 Revocation. In addition to the provisions of the administrative code, the department shall be authorized to revoke a permit when:

P-103.3.1 Violation. Any plumbing work for which the permit was granted is done in violation of Section 9-1003 or the regulations promulgated pursuant thereto; or

P-103.3.2 Inspection. Any plumbing work for which the permit was granted fails to pass any inspection or test conducted by the Department or by the Department of Public Health.

SECTION P-104 SUBCONTRACTORS

P-104.1 Disclosure. Any plumbing contractor who accepted a contract as a subcontractor from another plumbing or retail firm must indicate so on the permit.

P-104.2 Permit exclusive. A Registered Master Plumber shall not work under another Registered Master Plumber's plumbing permit except as a subcontractor or an employee. When work is being performed by a subcontractor, the Department shall be notified in writing that such work is being performed with permission of the permitted Registered Master Plumber, holding the original permit

SECTION P-105 UNLICENSED PERSONS

P-105.1 License required. No person shall install plumbing, water drain or waste piping, or fixtures unless properly licensed pursuant to Title 9, Section 9-1003. No person shall hire such unlicensed person to perform plumbing work. Any person who has had plumbing work performed by an unlicensed person must have a Registered Master Plumber inspect and if necessary redo the work. Permits must be secured for the inspection activity and for any additional plumbing work as a result of the inspection.

SECTION P-106 PLUMBING REGULATIONS

P-106.1 Authorization. In enacting this code, the Council recognizes that the Department has promulgated technical regulations governing the manner in which plumbing work is to be performed and the materials that are to be used. Those regulations are hereby reaffirmed. The Department is authorized to promulgate additional such regulations and to amend existing such regulations as it deems necessary or appropriate from time to time. The Department is also authorized to promulgate any other regulations necessary or appropriate to implement the provisions of this code. Promulgation of regulations shall be made subject to published notice and upon request, a public hearing.

CHAPTER 2
DEFINITIONS

SECTION P-201 GENERAL

P-201.1 Scope. Unless otherwise expressly stated, the following words and terms shall, for the purposes of this code, have the meanings shown in this chapter.

P-201.2 Interchangeability. Words stated in the present tense include the future; words stated in the masculine gender include the feminine and neuter; the singular number includes the plural and the plural the singular.

P-201.3 Terms defined in other codes. Where terms are not defined in this code and are defined in the building or mechanical codes listed in Chapter 19, such terms shall have the meanings ascribed to them as in those codes.

P-201.4 Terms not defined. Where terms are not defined through the methods authorized by this section, such terms shall have ordinarily accepted meanings such as the context implies.

SECTION P-202 GENERAL DEFINITIONS

Air gap. The unobstructed vertical distance through the free atmosphere between the lowest opening from any pipe or faucet supplying water to a tank or plumbing fixture and the flood-level rim of the receptacle.

Apprentice. A person registered as an Apprentice Plumber by the City of Philadelphia.

Approved. In accordance with the regulations of the Department.

Area drain. A drain installed to collect surface or rainwater from an open area. (Also referred to as yard drain.)

Backflow. The flow of water or other liquids into the distributing pipes of a potable supply of water from any source or sources other than its intended source, including back-siphonage and flow through a cross connection.

Backflow connection. Any arrangement whereby backflow can occur.

Backflow preventer. A device or means to prevent backflow.

Bona fide address. A genuine and legitimate street address where the Master Plumber conducts his or her business and where he or she can be readily contacted by the Department via telephone, mail or messenger on all regular working days of the Department.

Branch. Any part of a plumbing system other than a main.

Branch vent. A vent connecting one or more vents with a vent stack or stack vent.

Circuit vent. A branch vent that serves two or more traps and extends from in front of the last fixture connection of a horizontal branch to the vent stack.

Combination fixture. A fixture which is an integral combination of a sink and a laundry tray in one fixture.

Combined house drain. A house drain which receives both storm water and sewage.

Combined sewer. A sewer which receives both storm water and sewage.

Continuous vent, back vent, fixture vent, or trap vent. A vent that is a straight line continuation of the drain to which it is connected.

Continuous waste. A waste from two or more fixtures connected to a single trap.

Cross connection. Any physical connection or arrangement of pipes between two otherwise separate water supply systems, one of which contains potable water and the other unsafe water or water of unknown or questionable safety, whereby water may flow from one system to the other, the direction of flow depending on the pressure differential between the two systems, or whereby the potable water may be otherwise contaminated by the questionable water.

Dead end. A branch leading from a soil, waste, vent, or house drain and which is terminated at a developed distance of 2 feet or more by means of a cap, plug or other closed fitting.

Department. The Department of Licenses and Inspections.

Developed length. The length of a line of pipes measured along the center line of the pipes and fittings.

Diameter. Unless otherwise specifically stated, the nominal diameter as designated commercially.

Double offset. Two offsets installed in series in the same line.

Drain. Any pipe which carries waste water, storm water, or water-borne waste in a building drainage system.

Drainage system. All the piping within public or private premises which conveys sewage, rainwater or other liquid wastes to a point of disposal. Drainage systems include the house drain, but exclude public sewer systems, private or public sewage-treatment disposal plants, and laterals installed under City ordinance or by an authorized agent of the City.

Dry vent. Any vent that does not carry water or water-borne wastes.

Effective opening. The minimum cross-sectional area at the point of water-supply discharge, measured or expressed either in terms of the diameter of a circle or equivalent cross-sectional area.

Fixture branch. In a water-supply system, the water-supply pipe between the fixture-supply pipe and the water.

Fixture drain. The drain from the crown trap of a fixture to the junction of that drain with any other vented drain pipe.

Fixture-supply pipe. A water-supply pipe connecting the fixture to the fixture branch at the wall or floor line.

Fixture unit. A design factor so chosen that the load-producing values of the different plumbing fixtures can be approximately expressed as multiples of that factor.

Flood level. In reference to a plumbing fixture, the level at which water begins to overflow the top or rim of the fixture; in reference to roofs, the level at which water begins to discharge to the storm drain.

Flood-level rim. The top edge of the receptacle from which water overflows.

Flushometers. A flush valve directly connected to the water supply system.

Flush valve. An automatic, delayed-action, self-closing valve for flushing water closets and similar fixtures.

Fresh air inlet. A connection to the drainage system to permit the circulation of air through the system.

Frost-proof closet. A closet without an integral trap which has its trap and the control valve for its water supply installed below the frost line.

Grade.

(a) The rise, fall or slope of a pipe in reference to the horizontal plane. For drainage piping, grade is normally expressed as the rise or fall in inches or fraction thereof per foot of length of pipe.

(b) The lowest adjacent ground level, either front, such as pavement; or rear, such as driveway; or area drain level.

Grease or Oil Interceptor. A receptacle designed to intercept and retain grease, oil or fatty substances contained in kitchen or other wastes, including but not limited to a “grease trap”.

Horizontal branch. A branch drain extending laterally from a soil or waste stack, leader, house drain or house storm drain - with or without vertical sections or branches - which receives the discharge from one or more fixture drains or rainwater inlets and conducts it to the respective soil or waste stack, to the house drain, or to the house storm drain.

Horizontal pipe. Any pipe or fitting that is installed in a horizontal position or with a slope less than 3 inches per foot of length.

House drain. That part of the lowest horizontal piping of a building drainage system, including the horizontal branch from the base of a stack connected to the main house drain, which receives the discharge from soil, waste, or other drainage pipes in the building and conveys it to the existing lateral, main sewer, cesspool or septic tank.

House storm drain. A drain used for conveying rainwater, ground water, subsurface water, condensate, cooling water, or other similar discharge to the existing lateral, main sewer, or loose well.

House sub-drain. That portion of a drainage system which cannot drain by gravity into the house drain.

House trap. A running trap installed in the house drain to prevent circulation of gases between the drainage system of the building and the sewer.

Indirect waste pipe. A waste pipe that does not connect directly to the drainage system but which conveys liquid waste by discharging above flood level into a plumbing fixture or receptacle that is directly connected to the drainage system.

Industrial waste. The water-borne wastes of industry or industrial processes.

Interceptor. A receptacle designed and constructed to separate or intercept and prevent the passage of oil, flammable or combustible liquid, grease, sand, or other material into the drainage system to which such receptacle is directly or indirectly connected, including but not limited to a "separator".

Journeyman plumber. A person who has obtained a Journeyman Plumber license from the City of Philadelphia.

Lateral. The piping from the main sewer to the curb line.

Leader. The exterior downspout from the roof to the rainwater conductor.

Loop vent. A circuit vent which loops back and connects with a stack vent.

Main. The principal artery of any system of piping to which branches are connected.

Main sewer. Any sewer owned or maintained by the City.

Master plumber. A person who has obtained a Master Plumber license from the City of Philadelphia.

Minor repairs. The repair of an existing plumbing fixture, including the replacement of faucets or valves or parts thereof with like material or material serving the same purpose; the clearance of stoppages; the stopping of leaks without replacement of water, drainage or vent piping; the relieving of frozen pipes; other minor replacements or repairs, not including changes in the piping to the fixtures or in drainage, vent or water-supply system, other than the aforementioned items, and not including the replacement of any plumbing fixture. Replacement or repair of hot water heaters and hydronic boilers is not considered minor repairs under this section.

Offset. A combination of elbows or bends in a line of piping which brings one section of the pipe out of line with another section.

Plumber. A person registered and licensed to install plumbing.

Plumbing Advisory Board. A Board consisting of individuals appointed by the Mayor who advise the Commissioner of the Department on matters relating to this code and the plumbing industry.

Plumbing fixture. A receptacle which receives water, liquid, or water-borne waste and discharges it into a drainage system to which such receptacle is directly or indirectly connected.

Plumbing system. The water-supply system, fixtures, fixture traps, drainage system, vent system, storm water drainage system, vent devices, appurtenances and connections.

Potable water. Water from a public or individual water supply system or source which has been approved for human consumption, the preparation of food, and ablutionary purposes with respect to humans and food or food service equipment or utensils, as certified by the Pennsylvania Department of Health or by the Philadelphia Department of Health.

Private sewer. Any sewer privately owned and maintained and not directly controlled by the City.

Rainwater conductor. That portion of pipe which is outside of a building connecting a "Leader" or which is inside of a building conducting storm water from the roof to the main drain or storm sewer. (See "Leader".)

Relief vent. A branch vent connected to a horizontal branch between the first fixture drain and the soil or waste stack to prevent back pressure on the trap seals.

Return offset. A double offset installed so as to return the pipe to its original alignment.

Rim: The unobstructed open edge of a fixture.

Riser: A water-supply pipe which extends vertically one full story or more to convey water to branches or fixtures.

Sand interceptor. An interceptor primarily intended to intercept sand or earth, including but not limited to a "sand trap".

Sanitary sewer. A sewer which carries sewage or industrial waste and excludes storm, surface and ground water.

Sewage: Any liquid waste from buildings or premises which contains animal or vegetable matter in suspension or solution, or liquids containing minerals in solution from laboratories or industrial establishments.

Single soil or waste stack system. A soil or waste stack that has individual fixture drains, individual blind closet bends, individual closet bends with two separate fixture drains connected to the closet bend, and a uniformly-sized horizontal soil or waste branch with two or more fixtures and which is vented by either a branch vent or a loop vent connected to the soil or waste stack at any branch interval.

Size of pipe or tubing. The nominal size that pipe or tubing is commercially designated.

Slant. An outlet connection, at the main sewer for receiving storm or sanitary waste from the lateral.

Soil pipe. Any pipe, except an individual fixture drain 8 feet or less in length, which conveys the discharge of water closets or plumbing fixtures having similar functions, with or without the discharge from other fixtures.

Stack. A general term for the vertical main of a system of soil, waste, or vent piping.

Stack vent. The extension of a soil or waste stack above the highest horizontal branch connected to the stack.

Storm drain. A drain used for conveying rainwater, subsurface water, condensate, cooling water, or similar discharges and which is connected to a storm sewer or other approved place of disposal.

Storm sewer. A sewer which receives discharge from storm drains or surface, subsurface, or storm water from the ground, streets, roofs, or other areas, including street wash, but not including sewage or untreated liquid industrial waste.

Subsoil drain. A drain installed for collecting subsurface or seeping water and conveying it to a place of disposal.

Sump. A tank or pit which receives the discharge from drains or other wastes, and from which the discharge is pumped, ejected or otherwise mechanically propelled into a drainage system.

Trap. A fitting or device so designed and constructed as to provide a liquid seal which will prevent the back passage of sewer gases without materially affecting the flow of sewage or waste water through it.

Trap seal. The vertical distance between the crown weir and the dip of the trap.

Vent stack. A vertical pipe installed primarily for the purpose of providing circulation of air to or from any part of the drainage system, including but not limited to a "main vent".

Vent system. A pipe or pipes installed to provide a flow of air to or from a drainage system or to provide a circulation of air within such system to protect trap seals from siphonage and backpressure.

Waste pipe. Any pipe, except an individual fixture drain 12 feet or less in length, which receives the discharge of any fixture, except water closets or similar fixtures, and conveys it to the house drain, soil, or waste stack.

Water distribution pipe. The pipe from the curb stop to the building or premises.

Water main. A water supply pipe for public or community use.

Water outlet. The water discharge opening as used in connection with the water-distribution system.

Water-service pipe. The pipe from the water main to the curb stop.

Water-supply pipes. The pipes in a building which convey water from the water distribution pipe to the plumbing fixtures or other outlets.

Water-supply system. The water-service pipe, the water distribution pipe, the water-supply pipes, and the necessary connecting pipes, fittings, control valves, tanks, water heaters, water filtering or treatment equipment, and all appurtenances forming part of the system for supplying water to plumbing fixtures or other water outlets on the premises.

Wet vent. A waste pipe that serves also as a vent.

Yoke vent. A pipe connection directly below a flat offset and paralleling the horizontal line and soil stack and connecting into the stack vent or vent stack above the highest fixture.

SECTION P-203 ABBREVIATIONS

P-203.1 The following abbreviations apply where used in this code:

ANSI: American National Standards Institute.
ASME: American Society of Mechanical Engineers.
ASTM: American Society for Testing and Materials.
AWS: American Welding Society.
AWWA: American Water Works Association.
CABO: Council of American Building Officials.
CSA: Canadian Standards Association.
CISPI: Cast Iron Soil Pipe Institute.
FS: Federal Specifications.
NSF: National Sanitation Foundation.
OSHA: Occupational Safety and Health Administration.

[THIS PAGE IS INTENTIONALLY BLANK]

CHAPTER 3
MATERIALS

SECTION P-301 GENERAL REQUIREMENTS

P-301.1 Compliance. All material used for plumbing installation work shall be free from detrimental defects and shall conform to this code and manufacturer's specifications.

P-301.2 Unauthorized material. All materials used in the plumbing industry which are not approved by this code shall not be stocked or sold by any retail or wholesale plumbing supply house, retail outlet, hardware store or supermarket located within the City of Philadelphia. Any such materials in stock are subject to confiscation by the Department, effective January 1, 1996.

SECTION P-302 NEW MATERIALS, FIXTURES AND METHODS

P-302.1 Approval. No material, device, fixture, method of assemblage, installation, appurtenance or appliance, other than those specified or permitted by this code, shall be installed unless it has been approved by the Department and is in conformity with the conditions of such approval.

P-302.2 Tests. When deemed impractical to conduct adequate tests prior to installation, the Department is authorized to grant tentative approval and permission to make installation as proposed. Final approval shall not be given until tests conducted after installation show that the material, device, fixture, method of assemblage, installation, appurtenance or appliance meets the intent of this code, functions as required, and conforms to the conditions of approval set forth by the Department.

SECTION P-303 IDENTIFICATION

P-303.1 Markings. Whenever the standard under which a material, fixture, or device is approved requires that the item be identified in a specified manner as to weight or quality, such identification shall be provided in accordance with the standard.

P-303.2 Solder. Solder and solder fluxes shall have labels stating: "Contains 0.02% or less lead." Pursuant to Pennsylvania Act #33, July 6, 1993, solder which does not conform to this standard shall not be offered for sale in the City, either at retail or wholesale outlets. All non-conforming solder shall be subject to confiscation by the Department.

SECTION P-304 CAULKING FERRULES

P-304.1 Material. Brass caulking ferrules shall be of brass pipe conforming to the standards listed in Section P-305 or of heavy brass of the weight and dimensions given in Table P-304. Seamless copper ferrules used in lieu of cast brass shall correspond in size and weight to brass ferrules.

TABLE P-304 — BRASS CAULKING FERRULES

Pipe Size (Inches)	Actual Inside Diameter (Inches)	Minimum Length (Inches)	Minimum Weight
2	2¼	4½	1 lb.
3	3¼	4½	1 lb., 12 oz.
4	4¼	4½	2 lb., 8 oz.

SECTION P-305 MATERIALS FOR PLUMBING INSTALLATIONS

P-305.1 Compliance. Materials used for plumbing installations shall be in accordance with this section and Table P-305, unless specified otherwise in this Code.

P-305.1.1 Installation of Materials. All materials used shall be installed in strict accordance with the standards under which the materials are accepted and approved. In the absence of such installation procedures, the manufacturer's installation instructions shall be followed. Where the requirements of referenced standards or manufacturer's installation instructions do not conform to minimum provisions of this code, the provisions of this code shall apply

P-305.2 Aluminum. Aluminum drain pipe is permitted for waste and vents using no-hub cast iron fittings and no-hub clamps.

P-305.3 Reserved.

P-305.4 Medical. Only glass (Pyrex) and stainless steel shall be used for dialysis, reverse osmosis or deionized water piping.

Exception: PVC, CPVC and Polypropylene piping be permitted in reverse osmosis and deionized water systems.

P-305.5 Pipes and joints permitted. Pipe and joint material shall be in accordance with Table P-305.5.

P-305.6 Plastic. All plastic pipe and fittings intended for use in the transport of potable water shall bear the label of an approved agency as conforming to NSF 14-90 "Plastic Piping Components and Related Materials" and shall conform to applicable standards referenced in Section P-305.

P-305.7 Potable Water. All water service and water distribution pipe and fittings intended for use in the transport of potable water shall conform to NSF 61-1997b "Drinking Water System Components — Health Effects" in addition to the applicable standards referenced in Section P-305.

TABLE P-305 — MATERIALS FOR PLUMBING INSTALLATIONS

Material	Standard
Vitrified Clay Sewer Pipe (Standard/Extra Strength)	ASTM C700-91 "Specification for Vitrified Clay Pipe, Extra Strength, Standard Strength, and Perforated"
Vitrified Clay Pipe Joints	ASTM C-425-91 "Specification for Compression Joints for Vitrified Clay Pipe and Fittings"
Concrete Sewer Pipe (Non-Reinforced)	ASTM C14-90 "Specification for Concrete Sewer, Storm Drain, and Culvert Pipe"
Concrete Sewer Pipe (Reinforced)	ASTM C76-90 "Specification for Reinforced Concrete Culvert, Storm Drain, and Sewer Pipe"
Cast Iron Soil Pipe and Fittings	ASTM A74-92 "Specification for Cast Iron Soil Pipe and Fittings"
Cast Iron Water Pipe	ASTM A377-89 "Index of Specifications for Ductile-Iron Pressure Pipe"
Ductile Iron	ASTM A377-89 "Index of Specifications for Ductile-Iron Pressure Pipe" AWWA C151-86 "Standard for Ductile Iron Pipe Centrifugally Cast in Metal Molds or Sand Lined Molds for Water or Other Liquids"
Cast Iron Threaded Drainage Fittings	ASME B16.12-91 "Cast Iron Threaded Drainage Fittings"
Cast Bronze Solder Drainage Fittings	ASME B16.23-84 "Cast Copper Alloy Solder Joint Drainage Fittings (DWV)"
Threaded Joints	ASME B1.20.1-83 "General Purpose Pipe Threads (inch)"
Joints (Brazing Metals)	AWS A5.8-92 "Specifications for Filler Metals for Brazing"
Joints - Gasket, Compression and Rubber Ring	ASTM C425-91 "Specification for Compression Joints for Vitrified Clay Pipe and Fittings" ASTM C443-85a (1990) "Specification for Joints for Circular Concrete Sewer and Culvert Pipe, Using Rubber Gaskets" ASTM C564-88 "Specification for Rubber Gaskets for Cast Iron Soil Pipe and Fittings" ASTM D1869-78 (1989) "Specification for Rubber Rings for Asbestos-Cement Pipe
Galvanized Pipe	ASTM A53-90b "Specification for Pipe, Steel, Black, and Hot-Dipped, Zinc-Coated, Welded and Seamless"
Malleable Iron Threaded Fittings	ASME B16.3-85 "Malleable Iron Threaded Fittings"
Brass Pipe	ASTM B43-91 "Specification for Seamless, Red Brass Pipe, Standard Sizes"
Seamless Brass Tube	ASTM B135-91B "Specification for Seamless Brass Tube"
Cast Bronze Threaded Fittings	ASME B16.15-85 "Cast Bronze Threaded Fittings"
Copper Drainage Tube, Type DWV	ASTM B306-88 "Specification for Copper Drainage Tube (DWV)"
Copper Water Tube, Type K, L, M	ASTM B88-92 "Specification for Seamless Copper Water Tube"

Material	Standard
Seamless Copper Tubing	ASTM B75-92a "Specification for Seamless Copper Tube"
Soldered Fittings (for Copper Water Tube)	ASME B16.22-89 "Wrought Copper and Copper Alloy Solder Joint Pressure Fittings
Flared Fittings (for Copper Water Tube)	ASME B16.26-88 "Cast Copper Alloy Fittings for Flared Copper Tubes"
Stainless Steel Pipe	ASTM A312-92a "Specification for Seamless and Welded Austenitic Stainless Steel Pipes"
Borosilicate Glass Pipe and Fittings	ASTM C1053-90 "Specification for Borosilicate Glass Pipe and Fittings for Drain, Waste, and Vent (DWV) Applications"
Sheet Brass	ASTM B36-91a "Specification for Brass Plate, Sheet, Strip, and Rolled Bar"
Sheet Copper	ASTM B152-92 "Specification for Copper Sheet, Strip, Plate, and Rolled Bar"
Soft Solder	ASTM B32-91 "Specification for Solder Metal"
Fixture Setting Compound	FS TT-P-1536a-75 "Federal Specification for Plumbing Fixture Setting Compound"
Valves, Bronze, Gate	ASTM B61-90 "Specification for Steam or Valve Bronze Castings"
Valves, Cast Iron, Gate	ASTM A126-84 (1991) "Specification for Gray Iron Castings for Valves, Flanges, and Pipe Fittings"
Acid Resisting Cast Iron Pipe and Fittings	ASTM A518-92 "Specification for Corrosion-Resistant High Silicon Iron Castings"
Temperature and Pressure Relief Valves	ANSI Z21.22-86 "Relief Valves and Automatic Gas Shutoff Devices for Hot Water Supply Systems"
Malleable Iron Split Coupling with Synthetic Rubber Gasket	ASTM A47-90 "Specification for Ferritic Malleable Iron Castings"
Backflow Preventers	Water Department Regulations
Hubless Cast Iron Soil Pipe and Fittings	CISPI 301-90 "Specification for Hubless Cast Iron Soil Pipe and Fittings for Sanitary and Storm Drain, Waste and Vent Piping Applications"
Plastic Water Service, Chlorinated Poly (Vinyl Chloride) (CPVC) Pipe	ASTM D2846-92 "Specification for Chlorinated Poly (Vinyl Chloride) (CPVC) Plastic Hot-and Cold-Water Distribution Systems ASTM F441-89 "Specification for Chlorinated Poly (Vinyl Chloride) (CPVC) Plastic Pipe, Schedules 40 and 80" ASTM F442-89 "Specification for Chlorinated Poly (Vinyl Chloride) (CPVC) Plastic Pipe, (SDR-PR)"
Plastic Water Service, Polyethylene (PE) Pipe	ASTM D2104-89a "Specification for Polyethylene (PE) Plastic Pipe, Schedule 40" ASTM D2239-89 "Specification for Polyethylene (PE) Plastic Pipe (SIDR-PR) Based on Controlled Inside Diameter" ASTM D2737-89 "Specification for Polyethylene (PE) Plastic Tubing"
Plastic Water Service Polybutylene (PB) Pipe	ASTM D2662-89 "Specification for Polybutylene (PB) Plastic Pipe (SIDR-PR) Based on Controlled Inside Diameter" ASTM D2666-89 "Specification for Polybutylene (PB) Plastic Tubing" ASTM D3309-92 "Specification for Polybutylene (PB) Plastic Hot- and Cold-Water Distribution Systems"
Schedule 40 Plastic Drain, Waste and Vent Pipe, Poly Vinyl Chloride (PVC)	ATM D2665-91b "Specification for Poly (Vinyl Chloride) (PVC) Plastic Drain, Waste, and Vent Pipe and Fittings"
Schedule 40 Plastic Drain, Waste andVent Pipe, Acrylonitrile-Butadiene-Styrene (ABS)	ASTM D2661-91 "Specification for Acrylonitrile-Butadiene-Styrene (ABS) Schedule 40 and Plastic Drain, Waste, and Vent Pipe and Fittings"

Material	Standard
Plastic Pipe Fittings	ASTM D2464-91 "Specification for Threaded Poly (Vinyl Chloride) (PVC) Plastic Pipe Fittings, Schedule 80" ASTM D2466-90a "Specification for Poly (Vinyl Chloride) (PVC) Plastic Pipe Fittings, Schedule 40" ASTM D2467-92 "Specification for Socket-Type Poly (Vinyl Chloride) (PVC) Plastic Pipe Fittings, Schedule 80" ASTM D2468-90 "Specification for Acrylonitrile-Butadiene-Styrene (ABS) Plastic Pipe Fittings, Schedule 40" ASTM D-2609-90a "Specification for Plastic Insert Fittings for Polyethylene (PE) Plastic Pipe" ASTM F409-91a "Specification for Thermoplastic Accessible and Replaceable Plastic Tube and Tubular Fittings" ASTM F437-89b "Specification for Threaded Chlorinated Poly (Vinyl Chloride) (CPVC) Plastic Pipe Fittings, Schedule 80" ASTM F438-90 "Specification for Socket-Type Chlorinated Poly (Vinyl Chloride) (CPVC) Plastic Pipe Fittings, Schedule 40" ASTM F439-90 "Specification for Socket-Type Chlorinated Poly (Vinyl Chloride) (CPVC) Plastic Pipe Fittings, Schedule 80"

Table P-305.5 — APPROVED PIPES AND TYPES OF JOINTS

Pipes/Joints	Type
Black Steel	Threaded or Welding on large size gas piping
Cast Iron Soil Pipe and Fittings	Bell-and-Spigot (lead and oakum), No-Hub Coupling, Neoprene Gasket
Ductile Iron	Bell-and-Spigot, Neoprene Gasket, Mechanical Joint
Copper Tubing (KLM)	Sweat, Flare Compression Joints, Braze
Copper Tubing (DWV)	Sweat, Neoprene Gasket, Full Stainless Steel Jackets
Glass – Pyrex	Sweat, Neoprene Gasket, Full Stainless Steel Jackets, Compression Joint
Acid Resisting Cast Iron	Bell-and-Spigot, No-Hub Coupling
Plastic-PVC-ABS Drainage	Solvent Cement
Polyethylene	Acid Resistant, Electrical Wiring Fittings, No-Hub Coupling (O-Ring), Compression Fittings (lab line)
Polyethylene, Water	Flare, Compression, Threaded
Terra Cotta	Bell-and-Spigot (slip seal), Gasket and O-Ring
Brass and Copper Pipe	Threaded, Brazed
Tubes - O.D.	Compression, Flare
Aluminum Pipe	No-Hub Coupling or Galvanized Coupling

CHAPTER 4
JOINTS

SECTION P-401 GENERAL REQUIREMENTS

P-401.1 Performance. All joints shall be gas-tight and water-tight, and no paint, varnish, or putty shall be permitted on the joint until after the joint has been tested and approved.

SECTION P-402 THREADED JOINTS

P-402.1 Requirements. All threaded joints shall be American National Taper Pipe Thread, conforming to the standards listed in Section P-305. All burrs shall be removed. Pipe ends shall be reamed or filed out to the size of the bore, and all chips shall be removed. Pipe joint cement or paint shall be permitted on external threads only.

SECTION P-403 CAULKED JOINTS

P-403.1 Cast iron soil pipe. Cast iron-bell-and-spigot soil pipe shall be firmly packed with oakum or hemp and filled with molten lead not less than 1-inch deep which shall be run in one pouring and caulked tight when cold.

P-403.2 Acid-resistance. For acid-resisting cast iron pipe, joints similar to Section P-403.1 shall be made using white oakum in lieu of brown oakum or hemp.

P-403.3 Dimensions. Minimum dimensions for inside caulking connections shall be in accordance with Table P-403.

TABLE P-403 — MINIMUM DIMENSIONS FOR INSIDE CAULKING CONNECTIONS

Size (Inches)	Inside Diameter (Inches)	Depth of Connection (Inches)
2	3	2-1/4
3	4-1/8	2-1/2
4	5-1/8	2-3/4
5	6-3/16	3
6	7-1/4	3
8	9-3/8	3-1/4
10	11-1/2	3-1/4

SECTION P-404 GASKET TYPE JOINTS

P-404.1 Cast iron pipe. Gasket type joints in accordance with Section P-305 shall be permitted to join cast iron pipe outside of the building more than 10 feet beyond the building wall.

P-404.2 Drainage repair. For the repair of existing drainage systems above ground, neoprene gaskets–with continuous stainless steel reinforcing bands–are permissible when joining approved piping.

SECTION P-405 SOLDERED OR SWEATED JOINTS

P-405.1 Requirements. Soldered joints for tubing and pipe shall be made with approved fittings. Surfaces to be soldered shall be cleaned bright. Joints shall be properly fluxed and soldered with approved materials listed in Chapter 3.

SECTION P-406 FLARED JOINTS

P-406.1 Requirements. Flared joints for soft-copper water tubing shall be made with fittings meeting approved standards. The tubing shall be expanded with a proper flaring tool.

SECTION P-407 CLAY AND CONCRETE SEWER PIPE JOINTS

P-407.1 Pre-cast bituminous joints. Pre-cast bituminous joints for clay or concrete sewer pipe shall be able to withstand a temperature of 160º F without softening so as to destroy the effectiveness of the joint, and shall not be soluble in any of the wastes carried by the drainage system. Pre-cast bituminous joint material shall:

1. Bond firmly to the surface to which it is applied;

2. Be accurately cast within the hub and on the spigot;
3. Bond securely in the assembled joint; and
4. Completely and evenly fill the annular space between the hub and spigot.

P-407.2 Mortar joints. Mortar joints for clay sewer pipe or concrete sewer pipe shall be made by packing a closely twisted jute or oakum gasket of suitable size to pass around the pipe and lap at the top, into the annular space between the pipes. The remaining space shall be filled with firmly compacted mortar composed of one part portland cement and three parts mortar sand. The material for the mortar shall be mixed dry; only sufficient water shall be added to make the mixture workable. Lime putty or hydrated lime conforming to Type S of ASTM C207, equal to not more than 25% of the volume of portland cement, shall be permitted in the mortar.

P-407.3 O-ring and gasket-type joints. O-ring and gasket-type joints in accordance with Section P-305 shall be permitted outside the building more than 10 feet from the building wall. This type of joint is permitted for joining cast iron pipe to clay pipe, and cast iron pipe to concrete sewer pipe.

SECTION P-408 BRAZED JOINTS

P-408.1 Standards. Brazed joints shall be made in conformance to the standards listed in Section P-305.

SECTION P-409 STANDARD JOINTS

P-409.1 Slip joints. In drainage piping, slip joints other than expansion joints shall be permitted in the waste pipe between the trap seal and the fixture.

P-409.2 Ground joints. Ground joint brass connections which allow adjustment of tubing but provide a rigid joint when made up shall not be considered slip joints.

P-409.3 Unions and compression fittings. Union and compression fittings shall be permitted in trap seals on the inlet side of the trap and to connect the fixture trap to the fixture drain line. These fittings shall be installed either at the wall line or floor line inside the room where the fixture is located.

P-409.4 Expansion joints. Expansion joints of an approved type shall be permitted where necessary.

P-409.5 Fixture joints. The joints between drainage pipes and water closets, trap standard service sinks, pedestal urinals, or other floor outlet connected fixtures with trap standards shall be made to the drainage piping by means of brass or iron flanges, caulked, soldered, threaded or by use of a gasket in accordance with Section P-305. The connection shall be bolted to the earthenware by means of a brass bolt between the base of the fixture and the connection. The floor flange shall be set on an approved, firm base. When supported on wood floor construction, flanges shall be securely fastened to the floor construction. Floor flanges shall not be less than 1/4-inch thick when of cast iron or galvanized malleable iron, and not less than 1/8-inch thick when of brass or hard lead used for repair only. The joints between roof drains and floor drains shall be connected to the drain lines in accordance with this Chapter or by using a gasket in accordance with Section P-305.

SECTION P-410 PROHIBITED JOINTS

P-410.1 Above ground. The types of joints prohibited above ground inside of a building are:
1. No-hub coupling on copper to copper pipe;
2. No-hub coupling on ABS or PVC.

P-410.2 Below ground. No-hub pipe connections shall be prohibited below ground.

SECTION P-411 PERMITTED JOINTS

P-411.1 Above ground. The types of joints permitted above ground inside of a building are:

1. Cast iron hub stack to plastic with plastic to soil adapter;
2. Cast iron hub stack to copper with adapter, lead and oakum joint;
3. Cast iron hub stack to steel pipe, lead and oakum joint;
4. Cast iron no-hub stack to plastic or copper with no-hub coupling;
5. PVC connected to ABS with male and female adapters.
6. No-hub coupling shall be permitted for ABS connected to PVC.

P-411.2 Below ground. For repair of underground storm, sanitary or combined main drain lines, a double hub cast iron fitting shall be permitted with the approval of the Department. Such joints shall be properly caulked and supported.

P-411.3 House traps. In replacing a broken house trap, an approved mechanical type fitting shall be permitted on one side of the trap.

P-411.3.1 Two fittings. Under severe conditions, two fittings shall be permitted, with approval of the Department. The use of two fittings shall require concrete encasement on the street side.

[THIS PAGE IS INTENTIONALLY BLANK]

CHAPTER 5
TRAPS, CLEANOUTS, INTERCEPTORS, AND BACKWATER VALVES

SECTION P-501 GENERAL REQUIREMENTS FOR TRAPS

P-501.1 Method. Each plumbing fixture or waste inlet shall be separately trapped by a trap integral with the plumbing fixture, or by a waterseal trap placed as near to the fixture or waste inlet as possible.

Figure P-501.1

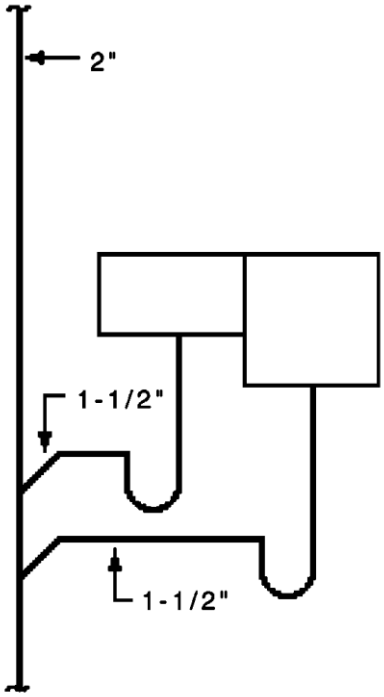

COMBINATION SINK AND TRAY

Figure P-501.1 Exc. #1

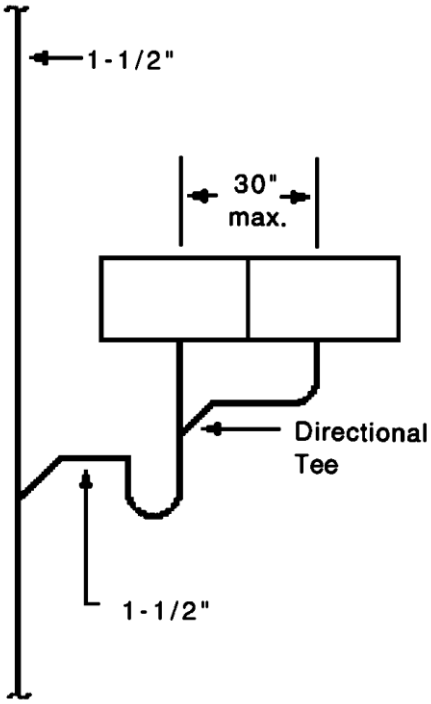

DOUBLE BOWL SINK

Exceptions:

1. A combination fixture having only one trap, provided that no separate compartment of such fixture is deeper than any other compartment connected to the same trap, and the waste outlets of such compartments are not more than 30 inches apart.
2. Kitchen sinks with two compartments of different levels and having a continuous waste and one trap. The trap and waste line shall be 1-1/2 inches minimum.

Figure P-501.1 Exc. #2

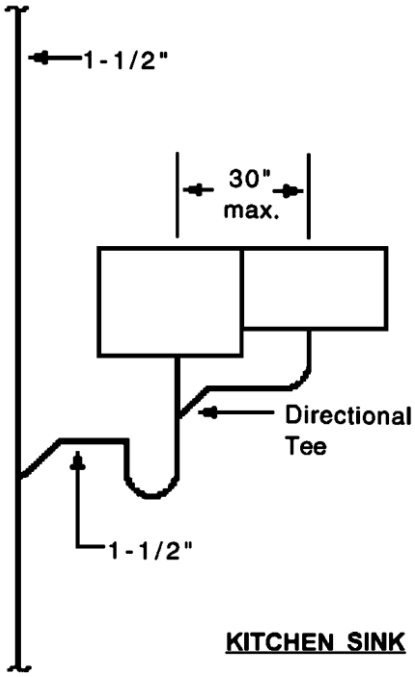

Figure P-501.1 Exc. #3

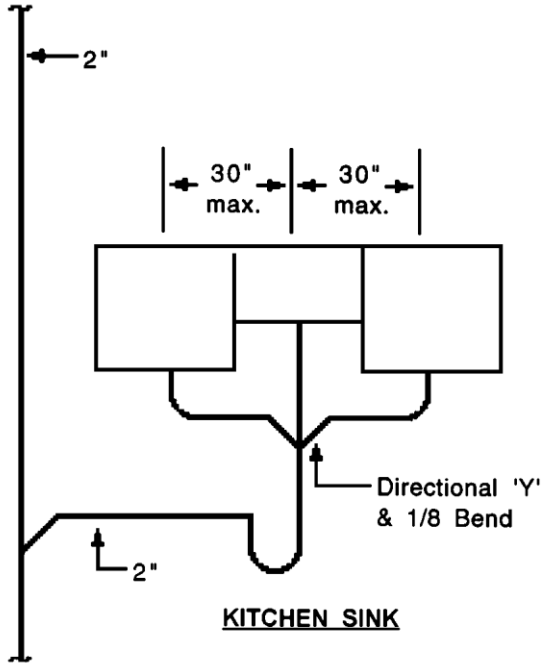

3. Kitchen sinks with three compartments, where one or more may be of different levels and having continuous waste and one trap. In accordance with Section P-506.1, the trap and waste line shall be 2 inches minimum.

4. A set of three single compartment laundry trays which are connected to one trap, provided that the waste outlets are no more than 30 inches apart, and the trap is centrally located.

Figure P-501.1 Exc. #4

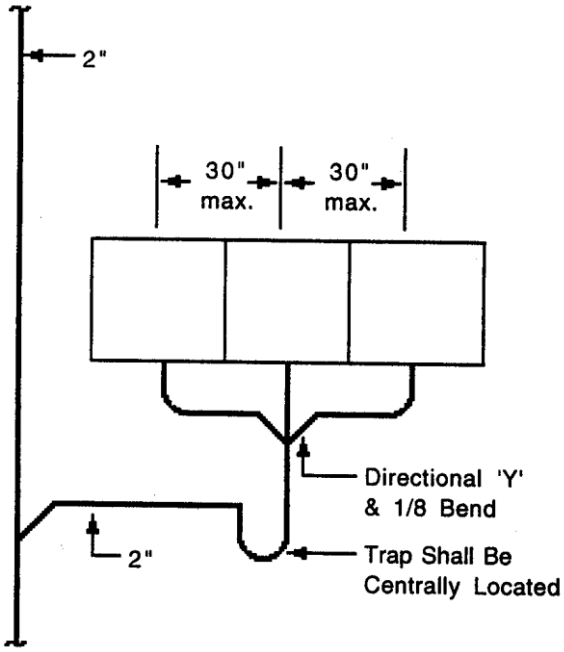

5. Dishwasher wastes which are discharged through a directional flow fitting located in the sink fixture trap or in the garbage grinder, provided a fixture drain loop is installed on the dishwasher waste to the highest point below the fixture rim and the distance on center between the waste outlets of the sink and the dishwasher does not exceed 6 feet.

Figure P-501.1 Exc. #5

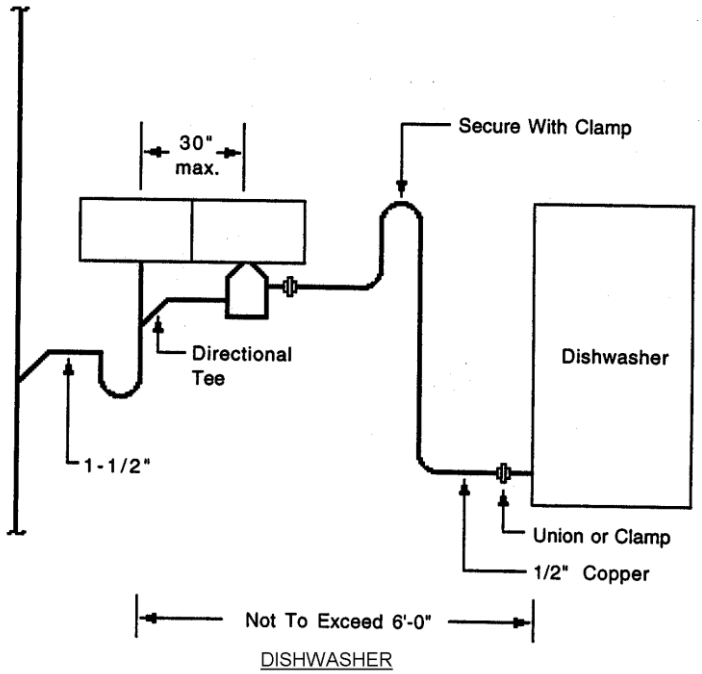

P-501.2 Prohibited traps. The use or installation of the following types of traps is prohibited:

1. Any trap whose seal depends upon the action of movable parts;
2. Any trap with interior partitions, except when integral with vitrified clay plumbing fixtures;
3. Double traps, unless a fresh air inlet is connected to the system between the traps;
4. Crown-vented traps.

P-501.3 Trap seal. Each fixture trap shall have a water seal.

P-501.4 Trap cleanouts. Each fixture trap, except those cast integral or in combination with fixtures in which the trap seal is readily accessible, or except when a portion of the trap is readily removable for cleaning purposes, shall have an accessible brass or nylon resin trap screw of ample size.

P-501.5 Trap levels and protection. All traps shall be set true with respect to their water levels and shall be protected from freezing and evaporation and other loss of seal.

P-501.6 Traps for floor drains. All floor drains, including cellar drains, shall be trapped. Floor drain traps shall be located at such depth below the drain inlet as to be readily accessible for cleaning. A cleanout is not required for a floor drain. A trap primer shall be installed when required by Section P-1204.3

P-501.7 House traps. An approved house trap shall be installed in each sanitary house drain and in each house storm drain located within the property line of the building they serve, and shall be located at the curb line or in the building just inside the foundation wall. There shall be an air inlet for fresh air entering the house drain just inside the water seal of the trap.

Exception: Individual on-site subsurface sewage disposal system. (See Section P-1401.2)

SECTION P-502 HOUSE TRAPS AND FRESH AIR INLETS

P-502.1 Size. The house trap shall not be less in size than the house drain pipe it traps, and in no case less than 5 inches for sanitary or combination sewers or 6 inches for storm sewers. No flex seal coupling shall be permitted. Fresh air inlets shall be 4 inches for 5-inch and 6-inch drains; 6 inches for 8-inch drains; two 6-inch vents for 10-inch drains with 8-inch standpipe; two 6-inch vents for 12-inch drains with 10-inch standpipe; two 6-inch vents for 15-inch drains with 10-inch standpipe. Where two fresh air inlets are used, connections shall be made by use of a wye on the standpipe. Vents larger than 6 inches shall not terminate at ground level. In lieu of multiple vents, use of ”Shuster” type vent or equal, properly sized, shall be permitted.

SECTION P-503 FRESH AIR INLETS

P-503.1 Location. Air inlets shall lead to the outer air and open at a convenient point, on the footway in the front of the building or at the curb line, and shall have a cover with openings at least three-fourths of the area of the pipe. In no case shall an air inlet open within 10 feet of any door, window, or fresh air intake for a heater or ventilation system.

P-503.2 Requirements. They shall be so arranged as to prevent the admission of sticks or other articles that would tend to obstruct the main trap. They shall be at least 1/4 inch in thickness and fastened with brass screws or bolts in order that the top can be removed if necessary, and the body shall be caulked fast to the upright pipe by a lead joint. Only approved air inlets shall be used.

SECTION P-504 LAVATORY AND SINK TRAPS

P-504.1 Material. Brass traps for lavatories and sinks shall have a minimum wall thickness of No. 17 Brown & Sharpe gauge, and the number of the gauge shall be stamped into the metal for inspection. Schedule 40 ABS or PVC plastic shall be allowed in accordance with Section P-902.5.

SECTION P-505 BATH TRAPS

P-505.1 General. Traps of 17-gauge are not permitted to be used as bath traps. The minimum size trap shall be 1-1/2 inches inside nominal diameter and shall have a water seal of not less than 2 inches and not more than 4 inches.

P-505.2 Material. Traps for bath tubs shall be made of cast brass, cast iron, DWV copper, galvanized durham piping, ABS, or PVC. ABS and PVC plastic traps shall conform to the size of the trap and ”ABS Tubular F409,” “PVC Tubular F409” or “P Tubular F409” shall be installed in accordance with Section P-902.5.

P-505.3 Access. A minimum 14-inch wide and 28-inch high panel shall be provided to afford access to the bath trap. It shall be located on the wall behind the end of the bath tub where the drain outlet is located. The access panel shall be a minimum 12” x 18” when located in the ceiling below.

Exceptions: Access panels shall not be required for the following:

1. Buildings of Use Group R-1.
2. Buildings of Use Group R-2 containing more than 8 stories of dwelling units.
3. Where trap joints are soldered, solvent cemented or screwed so as to form a solid connection.

P-505.3.1 Fireresistance rating. Access panels which are installed within fireresistance rated assemblies shall be labeled doors of the required fireresistance rating. Installation in stairway enclosures is prohibited.

SECTION P-506 SIZES OF FIXTURE TRAPS AND FIXTURE DRAINS

P-506.1 General. Except for fixtures with integral traps, the size of a trap for a given fixture shall not be smaller than specified in Table P-506.

P-506.2 Minimum size. No trap or fixture drain shall be less than 1-1/4 inches, except as provided for in Section P-904.5. The fixture drains for water closets, trap standard service sinks and pedestal urinals with integral traps shall not be less than 3 inches.

P-506.3 Water seal. Each fixture trap shall have a water seal of not less than 2 inches and not more than 4 inches. When a trap is required on a rainwater conductor, the seal shall not be less than 4 inches.

TABLE P-506 — SIZES OF FIXTURE TRAPS AND DRAINS

Fixture	Minimum Size of Trap & Fixture Drain (Inches)
Bathtub (with or without shower)	1½
Bidet	1¼
Combinations Fixture (not over 2 compartments on the same level)	1½
Dishwasher, Commercial	2
Domestic Washing Machine	1½
Drinking Fountain or Electric Water Cooler	1¼
Floor Drain	3
Fountain Cuspidor (Dental chair)	1¼
Laundry Tray (1 or 2 compartments)	1½
Laundry Tray (3 compartments)	2
Lavatory	1¼
Shower Stall (1 shower head and body sprays)	1½
Shower Stall (2 or 3 shower heads)	2
Shower Stall Receptor receiving discharge from:	—
4 to 5 shower heads	3
over 5 shower heads	4
Sink, Dishwasher, Residence	1½
Sink, Kitchen, Residence, single or double compartment	1½
Sink, Kitchen, Residence, 3 compartments	2
Sink, Pot or Scullery, Hotel or Public	2
Sink, Service or mop receptor	3
Sink, Soda Fountain or Bar	1¼
Urinal, Stall	2
Urinal, Trough	1½
Urinal, Wall	1½
Wash Fountain	2
Wash Sink, 6 ft.	1½
Wash Sink, more than 6 ft.	2

SECTION P-507 CLEANOUTS

P-507.1 Location. A cleanout shall be provided at or near the foot of each vertical waste or soil stack. A test fitting with an iron pipe size screw opening as prescribed in Section P-1503 shall be accepted to serve as a cleanout.

P-507.2 Trap connection. Any bolted or threaded floor or wall connection of a fixture trap shall be accepted as a cleanout.

P-507.3 Horizontal drains. Cleanouts in horizontal drainage lines of 4-inch nominal diameter or less shall not be more than 50 feet apart and not more than 100 feet apart for larger pipe sizes. Cleanout as required in Section P-507.1 shall be accepted to satisfy this requirement.

P-507.4 Material and design. The bodies of cleanout ferrules shall conform in thickness to that required for pipe and fittings of the same metal or of nylon resin, shall extend not less than 1/8 inch and shall be provided with a raised nut or recessed socket for removal.

P-507.4.1 Threads. Both ferrule and plug shall have American National Tapered Pipe Threads and are permitted for repairing a cleanout, where necessary.

P-507.5 Size. Cleanouts shall be of the same nominal size as the pipes into which they are installed, up to 4 inches and not less than 4 inches for larger pipes.

P-507.6 Access. All required cleanouts shall be located so as to be readily accessible.

P-507.6.1 Below floor. The openings of all underground or below-floor cleanouts in a building shall be flush with or above the floor and shall be accessible in manholes or through access doors.

P-507.6.2 Below grade. Exterior underground cleanouts shall be extended to the surface or otherwise made accessible.

P-507.6.3 Concealed. Cleanouts concealed in or by walls or ceilings shall either be extended to the exposed surface of such walls or ceilings or shall be accessible through access doors.

P-507.6.4 Clearance. Cleanouts on 4-inch or larger pipes shall be so installed that there is a clearance of not less than 18 inches for rodding. Cleanouts smaller than 4 inches shall have not less than 6 inches clearance.

SECTION P-508 INTERCEPTORS AND SEPARATORS

P-508.1 Where required. Where waste discharged into a drainage system contains or is likely to contain substances which hinder sewage disposal, such as non-soluble, flammable, or hazardous substances, and where required by the Industrial Wastes Division of the Water Department, an approved interceptor shall be installed which effectively prevents such substances from entering the public sewer.

P-508.2 Garages. All floor drains in garages shall be an approved type.

P-508.3 Design. All interceptors shall be so designed that they will not become air-bound or permit siphonage. They shall be located so as to be readily accessible for cleaning and inspection.

P-508.4 Capacity. The flow rate through an interceptor shall not exceed its rated capacity, and the interceptor shall operate at a minimum overall efficiency of 90% while draining the fixture in 2 minutes.

P-508.5 Grease interceptors. Grease interceptors shall have a flow-control fitting capable of external cleaning.

P-508.6 Limitation. No interceptor shall be considered a trap, unless the outlet is at least 1-1/2 inches above the inlet.

Exception: Grease interceptors (see Section P-510.4).

P-508.7 Traps. All fixture outlets shall be individually trapped, all traps shall be properly vented, and a fresh air inlet or vent shall be installed on the house side of the interceptor and shall have a vacuum breaker or vent. This is not applicable to a single fixture directly entering the grease trap.

Figure P-508.7

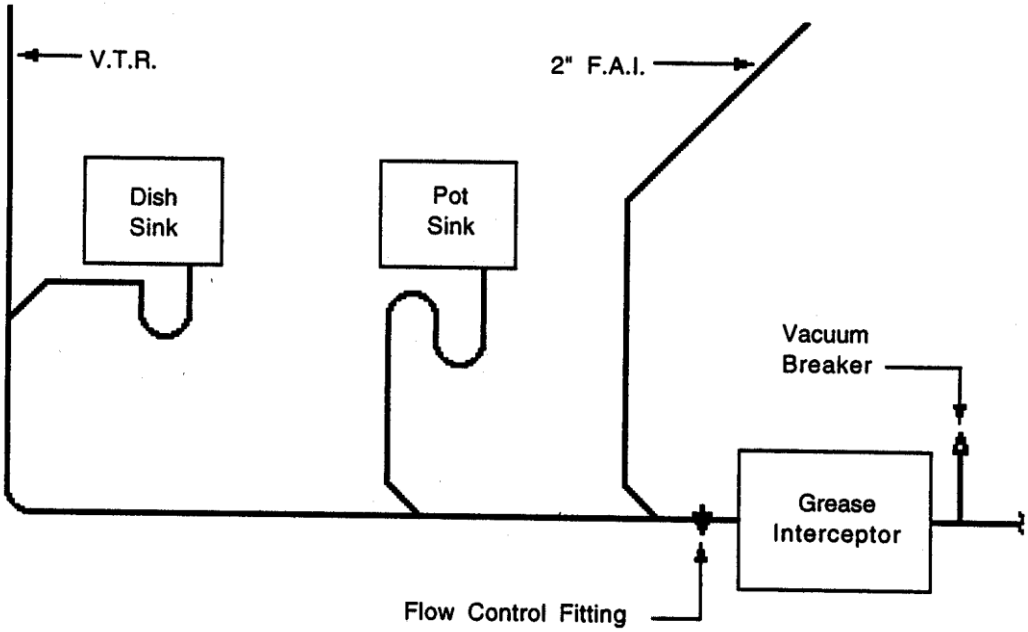

Figure P-508.7a

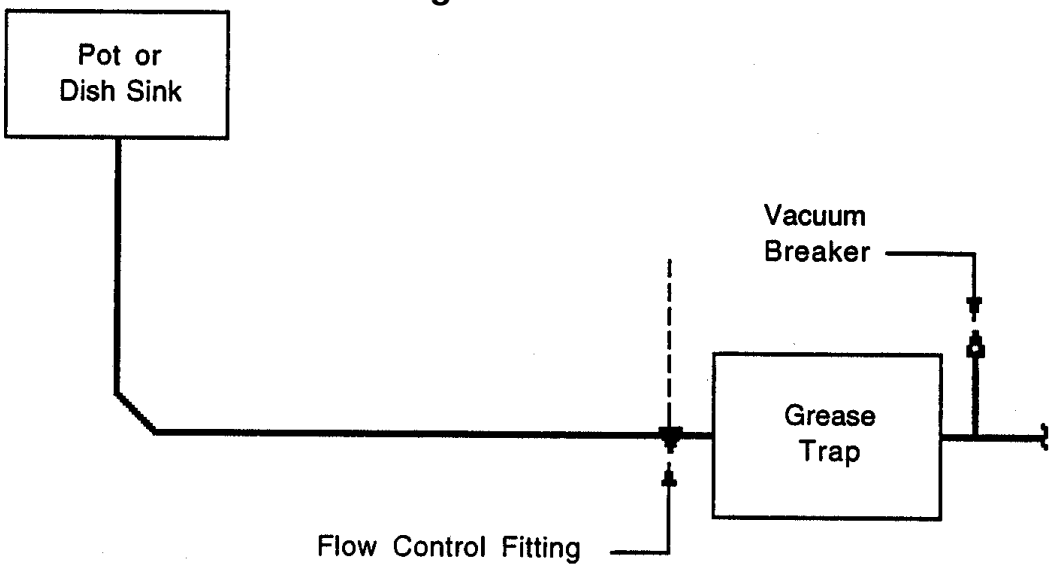

Note: Single Fixture Requires No Vent Within Legal Distance.

SECTION P-509 OIL INTERCEPTORS

P-509.1 Where required. When required by the Industrial Waste Division of the Water Department, an approved oil interceptor shall be installed in the drainage systems of buildings, structures, parts of buildings, and premises of the following uses or occupancies:

1. Commercial garages, auto repair shops, service stations, trucking docks, and any other place where gasoline or other flammable liquid with flash-point less than 90º F is dispensed or regularly used in connection with the work performed or processes employed;
2. Dry cleaners or dyers using solvents;
3. Paint, lacquer, or varnish factories;
4. Printing in manufacturing plants.

P-509.2 Tightness. Oil interceptors shall be constructed so as to be oil-tight and shall have easily removable water-tight and gas-tight covers.

P-509.3 Vents. Every oil interceptor shall have a separate vent on the terminal end of the inlet piping and a fresh air inlet on the sewer side of the interceptor tank to relieve vapor. The size of the fresh air inlet shall not be less than 2 inches in size. The fresh air inlet shall be connected to the interceptor tank and extended to the outer air in accordance with Section P-503 or other location approved by the Department.

P-509.4 Construction. Construction of oil interceptors shall be one of the following:

1. Reinforced concrete with the base, baffle wall and exterior walls not less than 6-inches thick; or
2. 8-inch sewer brick parged to a smooth finish on the interior walls; or
3. 8-inch 75% solid concrete block parged to a smooth finish on the interior walls; or
4. Other materials as approved by the Department.

P-509.5 Access. Adequate access to each compartment of the intercepting tank shall be provided by a minimum 18-inch manhole and removable cover. Manhole covers shall be cast iron or pre-cast reinforced concrete set into a retaining ring, and each cover shall weigh not less than 63 pounds. Manholes shall be brought up to grade and be water-tight and gas-tight.

Figure P-509.0

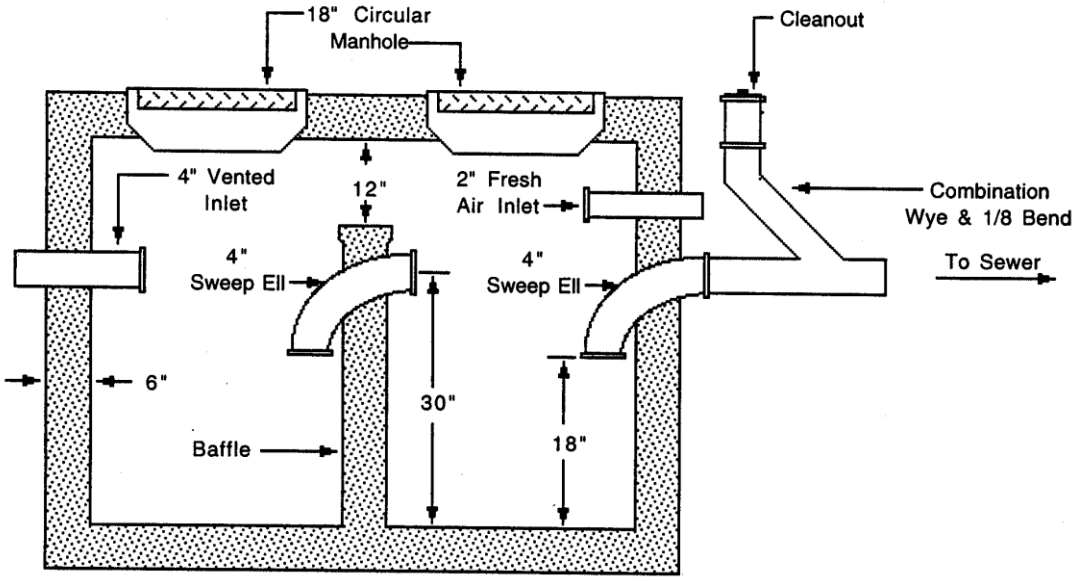

OIL INTERCEPTOR DETAIL

SECTION P-510 GREASE INTERCEPTORS

P-510.1 Where required. An approved grease interceptor shall be installed wherever grease as a product or by-product is introduced into a drainage system in sufficient quantity to cause line stoppage or hinder sewage disposal. The grease interceptor shall be installed in connection with the following uses or occupancies when required by the Industrial Waste Division of the Water Department:

1. All wastes in meat preparation areas, pot sinks, dishwashing machines and can washers for public eating places, institutions, and schools;
2. Slaughterhouses and meat-packing or meat-processing plants;
3. Rendering plants;
4. Soap factories.

P-510.2 Location. When a grease interceptor is installed, it shall be located as near as possible to the fixture or fixtures served and shall be readily accessible for cleaning.

P-510.3 Construction. Grease interceptors shall be constructed of impervious materials capable of withstanding shock from hot and cold water, shall be water-tight, and shall be equipped with easily removable, water-tight and gas-tight covers, and cleaning devices.

P-510.4 Seal. The trap seal on grease interceptors shall not be less than 4 inches and shall conform to Section P-501.2.

SECTION P-511 HAIR AND LINT INTERCEPTORS

P-511.1 Where required. An approved hair or lint interceptor shall be installed wherever hair or lint is introduced into the drainage system in sufficient quantity to cause line stoppage and shall be installed in connection with the following uses or occupancies when required by the Industrial Waste Division of the Water Department.

1. Commercial, institutional, hotel, club or other laundries equipped with commercial-type laundry equipment;
2. Beauty parlors and beauty operator training schools having 6 or more lavatories draining to a common house drain;
3. Dry cleaning establishments;
4. Hide or fur processing plants;
5. Establishments having laundry equipment on the premises for public use.

SECTION P-512 SAND INTERCEPTORS

P-512.1 Where required. The wastes from stables, barns, stable yards, barnyards, manure pits, and subsurface drainage pipes shall pass through an intercepting catch basin before entering the house drain, lateral or public sewer.

P-512.2 Construction. Sand and similar interceptors shall be designed and located so as to be readily accessible for cleaning and shall have a trap seal of not less than 6 inches.

P-512.3 Strainers. Floor drains shall be equipped with removable basket strainers where necessary to prevent solids which might cause line stoppage from entering the drainage lines.

SECTION P-513 GARBAGE GRINDERS

P-513.1 Where permitted. Installation of domestic garbage grinders shall be permitted when the drainage system is connected to a City sewer or to sewers which are so arranged as to discharge into a sewage treatment plant. Connection of commercial garbage grinders to a combination sewer leading to a sewage treatment plant is permitted. When such public sewers are unavailable, domestic and commercial garbage grinder drainage shall be in accordance with Chapter 14.

P-513.2 Requirements. The efflux from a domestic grinder shall be carried off through a trap and waste pipe with a minimum inside diameter of 1-1/2 inches. The efflux from a commercial grinder shall be carried off through a trap and waste pipe with a minimum inside diameter of 2 inches. The waste pipe from a commercial garbage grinder shall not exceed 12 feet in length from a vented soil or waste connection. Garbage grinders shall not be installed on a waste line where an interceptor is required by Section P-510.1.

P-513.3 Identification. For both domestic and commercial garbage grinders, the model number and manufacturer's name shall be permanently identified by a nameplate or by an indented marking on each grinder installed.

P-513.4 Testing and approval. The testing and approval of all garbage disposal units shall be authorized by and under the jurisdiction of the Water Department.

SECTION P-514 BACKWATER VALVES

P-514.1 Type permitted. Sewer gate valves shall be one of the following types:

1. Manually-operated rising stem type;
2. Swinging disk back pressure type; or
3. Any other type of back pressure valve approved by the Department.

P-514.2 Construction: Sewer gate valves shall be constructed of corrosion-resistant material.

P-514.3 Area. When fully open, sewer gate valves shall have a free-opening cross section not less than the pipe in which they are installed.

Figure P-514.3

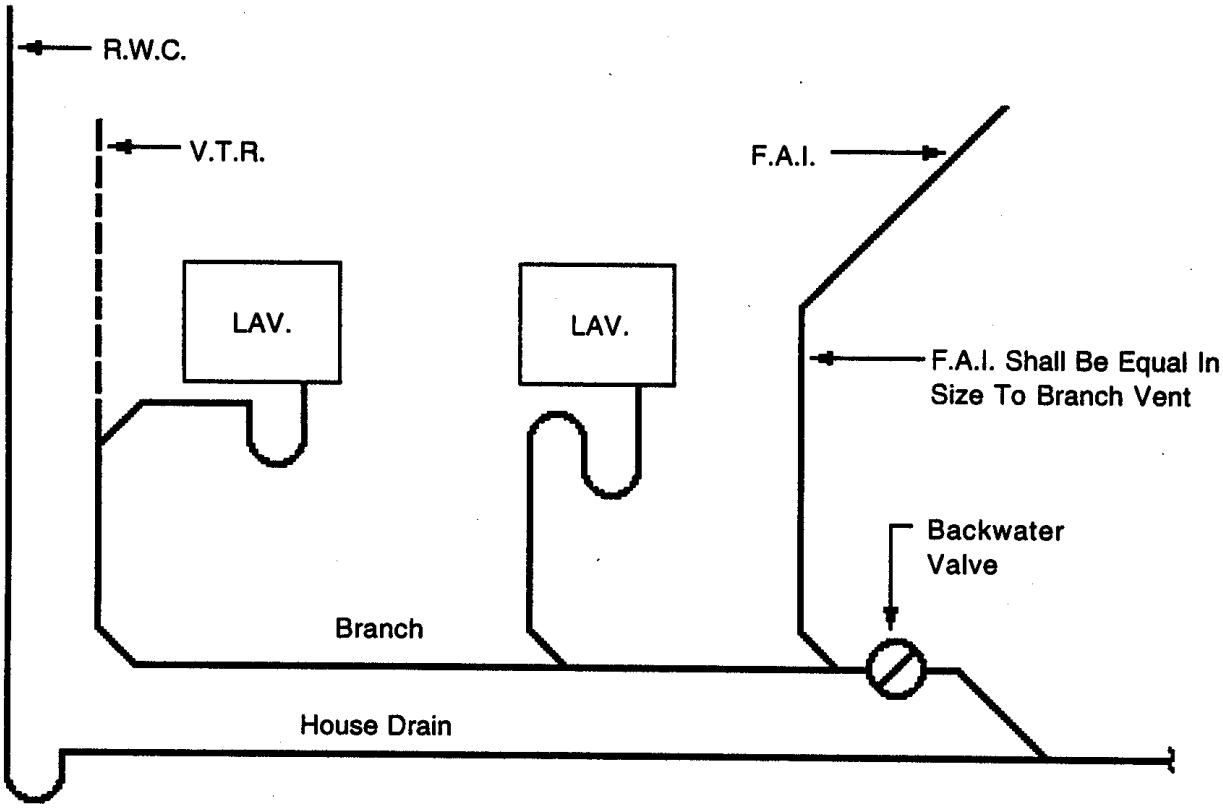

CHAPTER 6
PIPE SUPPORTS

SECTION P-601 VERTICAL PIPING

P-601.1 General. Vertical piping shall be secured at sufficient intervals to keep the pipe in alignment and to carry the weight of the pipe and contents.

P-601.2 Load transfer. Supports shall provide secure support for the pipe without excessive strain on joints or connections and shall properly transmit the load to the building structure or to independent posts, piers, and foundations.

P-601.3 Drainage piping. All vertical drainage piping shall have base supports and, when more than 30 feet in height, shall have intermediate supports spaced not more than 2 stories or 25 feet on centers. Closet bends, traps, trap-arms and similar branches shall be firmly secured against movement in any direction.

Exception: No-hub cast iron soil pipe shall be supported with a riser clamp located at each floor. When the distance between floors is greater than 10 feet, the vertical piping shall be supported every 10 feet using riser clamps where possible or rigid supports securely fastened to the building structure.

P-601.4 Restrictions. Building drains shall not be installed or arranged so as to support load from vertical piping. Pipe support shall be an approved type. Pipe hooks shall not be used.

P-601.5 Aluminum and plastic pipe. Aluminum and plastic pipe shall be supported a minimum of at least 5 feet on centers and closer, if required, to prevent horizontal deformation of the piping.

SECTION P-602 HORIZONTAL PIPING

P-602.1 Spacing. Horizontal piping above ground shall be supported at points sufficiently close to keep it in alignment and prevent sagging. Spacing for pipe supports shall comply with Sections P-602.1.1 through P-602.1.5.

P-602.1.1 Bell-and-spigot. Supports for bell-and-spigot cast iron pipe shall be a maximum 7 feet on centers.

P-602.1.2 No-hub. Cast iron no-hub soil pipe shall be supported by using threaded rod and clevis hangers. Sway bracing shall be installed where necessary. Hangers shall be provided at least every other joint, except that when the developed length between hangers exceeds 5 feet, they shall be provided at each joint. In no case shall hangers or supports be more than 5 feet apart. Hangers shall be placed immediately adjacent to the coupling. Piers of masonry or other suitable materials shall be approved to provide support.

P-602.1.3 Plastic pipe. Flexible plastic pipe and rigid polyethylene (fuseal or similar approved drainage system) shall have continuous supports for the entire length. ABS and PVC plastic pipe shall be supported at maximum 5-foot intervals.

P-602.1.4 Aluminum. Aluminum pipe shall be supported at maximum 5-foot intervals.

P-602.1.5 Other materials. All other piping materials shall be supported at maximum 10-foot intervals.

P-602.2 Below grade. Horizontal piping underground shall be firmly supported on the bottom of the trench, and proper depressions shall be provided under the bells of drainage piping to insure support for its entire length.

P-602.2.1 Soil conditions. Drainage piping installed in soft soil or filled ground shall be hard copper type “L” or bell-and-spigot cast iron pipe with lead and oakum joints.

SECTION P-603 HANGERS AND ANCHORS

P-603.1 Material. Hangers and anchors shall be made of material of adequate strength to provide secure permanent support, and shall be securely attached to the building construction.

P-603.2 Attachment. Hangers and anchors attached to masonry shall not be fastened to wooden plugs inserted in the masonry.

SECTION P-604 STRESS AND STRAIN

P-604.1 General. All piping in a plumbing system shall be installed without excessively stressing or straining any pipe or connection. Where necessary, provision shall be made for expansion, contraction, and settlement of the supporting structure.

SECTION P-605 PROTECTION OF PIPING

P-605.1 General. All piping in a plumbing system shall be installed in such manner as to protect pipes against breakage, corrosion, freezing and entry of foreign objects.

P-605.2 Breakage. Pipes passing under or through walls shall be protected against loads which might result in breakage.

P-605.3 Corrosion. Pipes passing through or under cinder concrete or other corrosive material shall be protected against external corrosion with bitumastic material.

SECTION P-606 ABANDONED PIPING

P-606.1 Abandoned drainage. Abandoned laterals shall have the house trap removed, and the pipe shall be hermetically sealed by a cap or plug at the curb line. Abandoned drainage piping within the building shall be hermetically sealed by a cap or plug.

P-606.2 Abandoned water piping. Abandoned water service shall be capped or plugged at the curb or shall have the ferrule removed. Abandoned water piping within the building shall be capped or plugged with a fitting.

P-606.3 Permit. A plumbing permit is required for abandonment, and work shall be performed by a Registered Master Plumber.

SECTION P-607 FREEZING PROTECTION

P-607.1 New construction. In new buildings, all soil, waste, and vent pipes above ground shall be located inside the buildings.

P-607.2 Existing buildings. In existing buildings, pipes shall be permitted outside with approval of the Department.

P-607.3 Below grade. Underground piping outside of buildings shall have a minimum of 3 feet of cover, except curb-extended rainwater piping.

SECTION P-608 RODENT PROTECTION

P-608.1 Seals. Exterior openings provided for the passage of piping shall be effectively sealed against rodents.

CHAPTER 7
PLUMBING FIXTURES

SECTION P-701 NUMBER OF FIXTURES

P-701.1 Quantity. All buildings, structures and occupancies shall be equipped with such plumbing fixtures as required by this code, in accordance with Table P-701 and the regulations of the Pennsylvania Department of Public Instruction, the Department of Public Health of the City, and the Housing and Health Codes of the City.

P-701.2 Multiple tenants. In buildings of multiple tenant occupancy, the fixtures required by Table P-701 shall be provided on each floor of multiple tenant use without restriction of travel distance. Such toilet rooms shall have their entrance located in the common areas.

SECTION P-702 QUALITY OF FIXTURES

P-702.1 Standards. All plumbing fixtures shall be made of materials with smooth, impervious surfaces and shall conform in quality and design to one of the following standards:

1. Enameled Cast Iron Plumbing Fixtures .....ASME A112.19.1-87;
2. Vitreous China Plumbing Fixtures.....ASME A112.19.2-90;
3. Stainless Steel Plumbing Fixtures (Residential) .....ASME A112.19.3-87;
4. Stainless Steel Plumbing Fixtures.....CAN/CSA B45.4-88;
5. Porcelain Enameled Formed Steel Plumbing Fixtures.....ASME A112.19.4-84;
6. Non-Vitreous Ceramic Plumbing Fixtures.....ASME A112.19.9-91;
7. Plastic Bathtub Units.....ANSI Z124.1-87;
8. Plastic Shower Receptors and Shower Stalls .....ANSI Z124.2-87;
9. Plastic Lavatories.....ANSI Z124.3-86;
10. Plastic Water Closet Bowls and Tanks .....ANSI Z124.4-86;
11. Plastic Sinks.....ANSI Z124.6-90.

SECTION P-703 ALTERNATE MATERIALS

P-703.1 Approved materials. In addition to the materials specified in Section P-702, sinks, lavatories, and special fixtures made of copper-base alloy, nickel, nickel-copper alloy or corrosion-resisting steel shall be permitted. No other material shall be used without the approval of the Department.

SECTION P-704 OVERFLOWS

P-704.1 Control. When any plumbing fixture is provided with an overflow, it shall be arranged so that water standing in the fixture can neither rise in the overflow when the stopper is closed nor remain in the overflow when the fixture is empty.

SECTION P-705 INSTALLATION

P-705.1 Access. All plumbing fixtures shall be installed so as to afford easy access for cleaning.

P-705.2 Support. Fixtures shall be firmly and securely supported and fastened.

P-705.2.1 Wall supported. Wall-hung fixtures shall be supported on approved metal hangers, chairs or bolts.

P-705.2.2 Masonry supported. Fixtures attached to or supported by masonry shall not be fastened to wood plugs.

P-705.3 Floor outlet fixtures. Floor outlet fixtures shall be secured to the floor by screws or bolts.

P-705.4 Accessible fixtures. Fixtures for the disabled shall meet the provisions of CABO ANSI A117.1-1992.

TABLE P-701 — MINIMUM NUMBER OF PLUMBING FIXTURES [a,b]

Type of Building Occupancy	Type of Fixture								
	Water Closets		Urinals		Lavatories		Bathtubs or Showers	Drinking Fountain	Other Fixtures
	No. of Persons	No. of Fixtures	No. of Persons	No. of Fixtures	No. of Persons	No. of Fixtures	No. of Fixtures	No. of Fixtures	No. of Fixtures
Assembly: Places of Worship	150 Women 300 Men	2 2	300 Men	1		2		1	
Assembly: Other than places of worship (auditoriums, theaters, convention halls)	1-100 101-200 201-400 Over 400	2 4 6 6, plus 2 for each 500 men and 1 for each 150 women	1-200 201-400 401-600 Over 600	1 2 3 3 plus 1 for each add'l. 300 men	1-200 201-400 401-750 Over 750	2 4 6 1 for each add'l. 500 persons		1 for each 500 persons	
Dormitories (school or labor); Institutional	Men: 1 for every 10 Women: 1 for every 8		1 for every 25 men; Over 150, add 1 for every 50 men		1 for every 12 persons		1 for every 20 persons	1 for every 75 persons	Laundry trays: 1 for every 50 persons
Buildings or structures containing employees [c]	1-15 16-35 36-55 56-80 81-110 111-150 Over 150	2 4 5 6 7 8 1 for each add'l 40 employees	Urinals may be provided in men's toilet rooms in lieu of water closets but not for more than 1/3 of the required number of water closets.		1-15 16-35 36-60 61-90 91-125 Over 125	1 2 3 4 5 1 for each add'l 45 persons		1 for each 75 persons per floor	
Schools	Ea 40 boys Ea. 35 girls	1 1	Each 30 Boys	1	Each 50 pupils	1	In gym or pool shower room, 1 for each 5 pupils	1 for each 100 pupils; at least 1 per floor	
Industrial: factories, warehouses, foundries and similar establishments	No. of each sex: 1-10 11-25 26-50 51-75 76-100 Over 100	1 2 3 4 5 1 for each add'l 30 employees	Where more than 10 men are employed: 11-30 31-80 81-160 161-240 Over 240	1 2 3 4 Add 1 for each addl 100 men	1-100 Over 100	1 for each 10 persons 1 for each 15 persons	1 shower for each 15 persons for places with excessive heat or occupational hazards from poisonous, infectious or irritating material	1 for every 75 persons	
Institutional, other than hospitals or penal institutions (on ea. occupied story)	1 for each 25 men; 1 for each 20 women		1 for each 50 men		1 for each 10 persons		1 for each 10 persons	1 for each 50 persons	
Hospitals, Individual Room Wards	1 for each 8 patients				1 for each 10 patients		1 for each 20 patients	1 for each 100 patients	
Penal Institutions, Prisoners	1 in each cell; 1 in each exercise room		1 in each exercise room		1 in each cell; 1 in each exercise area		1 on each cell block floor	1 on each cell block floor; 1 in each exercise area	

Type of Building Occupancy	Lawful Occupancy [d]	Water Closets		Urinal	Lavatories	
Food establishments, Restaurants, Catering halls, Clubs, Bars, Taverns, and similar establishments	1 to 25 persons total	One in a unisex toilet room		0	One in a unisex toilet room	
		Men	Women	Men	Men	Women
	26 to 50 persons total	1	1	0	1	1
	51-100 101-200[e]	2 3	4 6	1 2	1 2	3 4

Note a. Facilities for the disabled shall be required in accordance with the Philadelphia Building Code.

Note b. Where the building occupancy does not list the number of occupants by gender, the total number of occupants shall be divided, assuming a 50/50 gender ratio.

Note c. 1 Water Closet and 1 Lavatory may be used for both sexes in any place of business containing not more than 6 employees. No drinking fountain shall be required. A toilet room door with an inside lock shall be provided.

Note d. Lawful occupancy shall be determined by the Philadelphia Building Code.

Note e. For each additional 150 persons or fraction thereof, one additional lavatory and two additional water closets (or one water closet and one urinal for men) shall be required. These fixtures shall be required for: all new establishments; when building an addition to existing establishments; when increasing the seating capacity for patrons; and when replacing more than 50% of the plumbing fixtures. These facilities shall be located so as not to require the patron to pass through any food preparation area. This requirement does not apply where food is not consumed within the establishment or where only take-out food is provided.

SECTION P-706 WATER CLOSETS

P-706.1 Types of water closets. Water closets shall conform to the provisions of Sections P-706.1.1 through P-706.1.3.

P-706.1.1 Bowl type. Water closet bowls shall be siphon-jet, reverse trap, washdown, or blowout type with floor outlet; or siphon-jet or blowout type with wall outlet. Water-closet bowls and traps shall be made in one piece and shall be provided with internal flushing rims so constructed as to flush the entire interior of the bowl.

P-706.1.2 Public use. In rooming houses where two or more water closets are in a group, in lodging houses, factories, workshops, public buildings, hospitals, convalescent homes, nursing homes, and all institutions of similar character, and in all places where water closets and urinals are for public use, the water closet bowls shall be of an elongated type with an open front seat.

P-706.1.3 Water closets (1.6-Gallon Flush). Pursuant to the regulations of the Delaware River Basin Commission and Section P-720, all water closets to be replaced in existing dwellings or installed in new dwellings shall be of 1.6-gallon flush type. All replaced or new water closets in commercial buildings shall be either tank or flushometer type using 1.6 gallons of water.

P-706.1.3.1 Condition. This mandate shall be in effect until such time that the 1.6-gallon flush is proven unsatisfactory to the interior and exterior plumbing system, out to and including the curb trap, as determined by the Department.

P-706.2 Supports. Wall-hung closet supports shall be metal, and shall be designed and installed so that no force is transmitted to the piping.

P-706.3 Flushing. Water closet tanks shall have a capacity sufficient to properly flush the water closet bowls to which they are connected. The flush valve seat in close-coupled integral water closet combinations shall be 1 inch or more above the rim of the bowl so that the flush valve will close, even if the closet trapway is clogged.

P-706.4 Float valves. Float valves for water closet tanks shall automatically close tight. In low water closet tanks, the float valve shall provide sufficient refill to properly seal the trap in the bowl.

P-706.5 Flush valves in water closet tanks. Flush valves for water closet tanks shall close tight. Flush valves in high tanks of the gooseneck type shall be permitted with a 1¼-inch spud and pipe. In low water closet tanks, the flush valve shall have a 2-inch spud and pipe. Flush valves in low water closet tanks shall be equipped with an overflow, except when the tank is provided with an integral overflow. All overflows shall be arranged and installed to conform to the provisions of Section P-804 and Section P-806.

P-706.6 Flushometers. Flushometers shall be installed in a manner to make them readily accessible for repairing. When a direct flush valve is operated, it shall complete its cycle of operation automatically, opening fully and closing positively under the service pressure. At each operation, the valve shall deliver water in sufficient volume and at a rate that will thoroughly flush the fixture and refill the fixture trap. Means shall be provided for regulating the flow in flush valves and shall be arranged with vacuum breakers and installed to conform to the provisions of Section P-804 and Section P-806. Not more than one fixture shall be served by a single flush valve.

P-706.7 Frost-proof closets. Frost-proof closets shall be installed only in locations where the use of water closets conforming to Section P-706.1 is impractical, and then only when approved by the Department. Every frost-proof closet shall be located in a compartment which opens only to the outdoors. The fixture shall be of type approved by the Department.

P-706.7.1 Drains. The drain for the water supply shall spill on grade, discharge to an independent seepage pit, or discharge to indirect waste in accordance with Section P-1202.2.

P-706.7.2 Material. The pipe and the trap of frost-proof closets shall be of cast iron and not less than 3 inches in diameter.

SECTION P-707 URINALS

P-707.1 Flushing rims and traps. Siphon jet, blowout, and pedestal urinals shall have integral flushing rims and integral traps, except that washout and stall urinals with separate traps, and stall urinals without a flushing rim shall be permitted.

P-707.2 Trough urinals. Trough urinals shall only be installed on such premises as parks or buildings of temporary occupancy. They shall be provided with backs and made in one piece of cast iron, enameled on the inside. They shall not be less than 6 inches deep. The perforated wash down pipe shall be securely clamped as high as practicable to the back of the urinal, and the perforations shall be of such size and so arranged as to discharge an even curtain of water against the back of the urinal. Trough urinals shall be either arranged for a continuous flow of flushing water with an overhead supply or shall be equipped with automatic flush tanks having a flushing capacity of not less than 1½ gallons for each 2 feet of urinal length.

P-707.3 Flushometers. No direct flush valve shall serve more than one urinal. Flushometers shall conform to the provisions of Section P-706.6. No vacuum breaker is required, except a chemical deodorizer shall have a vacuum breaker installed in conjunction with automatic, delayed-action, self-closing valves for flushing urinals and similar fixtures when it is installed on the water piping system and connected to a urinal having a direct flush valve.

P-707.4 Conservation. Water conservation measures shall be taken in accordance with Section P-720.

SECTION P-708 BATHROOM AND TOILET ROOM REQUIREMENTS

P-708.1 Light and ventilation. Bathrooms and toilet rooms shall be illuminated and ventilated in accordance with the building and mechanical codes.

P-708.2 Location of fixtures and piping. Piping, fixtures or equipment shall not be located in such a manner as to interfere with the normal operation of windows, doors or other means of egress openings.

P-708.3 Enclosures and interior finish. The enclosure and interior finish of bathrooms and toilet rooms shall comply with the building code.

P-708.4 Water closet compartments. Each water closet utilized by the public or employees shall occupy a separate compartment with a door and walls or partitions between fixtures to ensure privacy.

Exception: Water closet compartments shall not be required in a single-occupant toilet room with a lockable door.

SECTION P-709 (*RESERVED*)

SECTION P-710 LAVATORIES

P-710.1 Wastes. Wastes shall have open strainers or stoppers.

P-710.2 Medical use. Lavatories for use in doctors', dentists', and similar offices where contact with human and animal anatomy is necessary, shall be provided with foot-pedal, wrist-operated, knee-action or other hands-free control devices for the water supply to the lavatory.

P-710.3 Conservation. Water conservation measures shall be taken in accordance with Section P-720.

SECTION P-711 SHOWERS

P-711.1 Floors or receptors. Except where factory-made receptors are used, shower floors shall be completely lined with a pan of approved water-tight material which shall be connected to the drain by using a clamping ring. Metal receptors shall have the drain attached by means of a locknut and gasket. The drain shall be designed for inside caulking with the packing backed to permit proper caulking. Precast receptors shall be in one piece and shall have a drain, which is cast in the receptor. The drain shall be designed for inside caulking, with the packing backed to permit the proper caulking. Precast receptors of more than one piece shall have a pan of approved material. All receptors shall conform to the requirements of Section P-702, except that inside caulking connections shall conform to Section P-403.3.

P-711.2 Conservation. Water conservation measures shall be taken in accordance with Section P-720.

SECTION P-712 SINKS

P-712.1 Waste outlets. Sinks shall be provided with waste outlets not smaller in size than the traps to which they are connected. Waste outlets shall have open strainers or stoppers.

P-712.2 Conservation. Water conservation measures shall be taken in accordance with Section P-720.

SECTION P-713 DRINKING FOUNTAINS

P-713.1 Requirements. Drinking fountains shall conform to Section P-702, and stream projectors shall be so assembled as to provide a minimum air gap of 1 inch between the orifice and the fixture flood level rim.

SECTION P-714 FLOOR DRAINS

P-714.1 Outlet. Floor drains shall be trapped and equipped with strainers and shall have not less than a 3-inch diameter outlet. Floor drains shall be deemed to be plumbing fixtures. Back pressure valves shall be provided where required to prevent backflow from City sewers.

P-714.1.1 Trough drains. A trough drain shall be considered as a floor drain. The dimensions of a trough drain shall not exceed 12 inches in width and 12 feet in length. Trough drains in excess of these dimensions shall be installed only when approved by the Department.

SECTION P-715 AREA DRAINS

P-715.1 When required. Area drains shall be provided on all premises in the locations required by items 1 through 7 below:

1. Paved areas, courts, open shafts as required by Section P-1001.1.
2. Driveways of any area which slope downward toward the building.
3. Terrain which slopes downward toward the building within 10 feet of the building's exterior walls.
4. Terrain which creates a low elevation such that standing water is possible.
5. Terrain which slopes downward toward adjacent property in such a manner as to concentrate the flow of runoff.

   Exception: Where terrain slopes toward a natural watercourse such as a creek, stream or river, an area drain shall not be required.
6. At the low point of any swales on the property.

   Exception: Where terrain slopes toward a natural watercourse such as a creek, stream or river, an area drain shall not be required.
7. Residential premises which do not contain a condition described in items 1 through 6, shall contain an area drain at a location on the property convenient for general use.

P-715.2 Installation. Required area drains shall be located and installed in accordance with Section P-715.2.1 through Section P-715.2.3.

P-715.2.1 Slope toward building. In cases where paved or unpaved areas slope toward the building, the drain shall be located a minimum of 18 inches from the exterior wall and the lowest elevation shall be established at the location of the drain. Trench drains shall be utilized where paved areas cannot be sloped to accomplish the intended purpose of preventing water from entering the building or draining against the foundation walls.

P-715.2.2 Slope to drain. Where area drains are installed in paved or unpaved areas as required by Section P-715.1, all contributing paved and unpaved areas shall be sloped toward the drain to accomplish the purpose of eliminating standing water or concentrated runoff toward buildings, adjacent properties or public rights-of-way.

P-715.2.3 Installation. Where area drains are installed in unpaved areas, they shall be set in a concrete pad which is a minimum of 4 inches thick and extends a minimum of 6 inches beyond the perimeter of the drain.

P-715.3 Plans required. Each application for plumbing permit for new construction shall include a grading plan which indicates the finished grade contours and/or elevations of the open land on the lot or lots for which application is made.

P-715.4 Drainage. Activity on a premises including, but not limited to re-grading, terracing, fencing and construction activity shall not result in the concentration of surface water drainage to adjoining property.

Exception: Where terrain slopes toward a natural water course such as a creek, stream or river.

SECTION P-716 PROHIBITED FIXTURES

P-716.1 Unsanitary installations. The fixtures and conditions listed in items 1 through 8 are deemed unsanitary and shall not be installed or maintained:

1. Water closets not complying with Section P-706.1.1 or P-706.1.2;
2. Water closets having an invisible trap seal, except for frost-proof closets permitted under Section P-706.7;
3. Water closets having an unventilated space;
4. Water closets with walls which are not thoroughly washed when the contents are discharged;
5. Water closets so arranged that the contents of the bowl can be siphoned back into the tank supplying the water for flushing or into the water distribution pipe and water supply pipes;
6. Floor gutter urinals;
7. Wooden laundry trays and sinks, except for special uses when approved by the Department;
8. Fixtures which do not provide a sufficient air gap or which may otherwise cause contamination of the water supply.

SECTION P-717 USED MATERIALS

P-717.1 Approval. No plumbing fixture, soil pipe, waste pipe or vent pipe which has been in use in a plumbing system in any building shall be removed and reused in any other building unless it has been thoroughly cleaned and disinfected, and inspected and approved by the Department.

P-717.2 Water distribution. Pipe and fittings that have been used for any other purpose shall not be used for distributing water.

SECTION P-718 TEMPORARY SANITARY FACILITIES

P-718.1 Portable toilets. The use of portable toilets shall be limited to special events and construction sites.

P-718.2 Removal. Portable and temporary water closet facilities shall be removed and the site shall be cleaned upon conclusion of the special event or completion of construction.

P-718.3 Construction sites. Temporary or permanent water closet facilities shall be provided at all construction sites in accordance with Table P-718.3, but not less than one water closet for every three floors. The owner and contractors are responsible to prevent any other places on or about the site from being used for such purposes.

TABLE P-718.3 — SANITARY FACILITIES FOR WORKERS

Number of Persons	Number of Closets
1 to 15	1
16 to 30	2
31 to 60	3
61 to 100	4
101 to 150	5

P-718.3.1 Temporary toilets. Temporary toilets shall only be utilized until such time as the building drain is installed and there is a concrete slab or permanent flooring to accommodate a water closet. It is the responsibility of the General Contractor to assure that construction of the main drain proceeds as rapidly as is reasonably possible.

SECTION P-719 SWIMMING POOLS

P-719.1 Water supply. An approved filtration system equipped with backwash and chlorinator shall be installed in accordance with applicable regulations of the Department and the Department of Health. The water piping to all swimming pools must be of a fixed and permanent supply with an approved air gap to prevent backflow in accordance with Section P-806, except above-ground swimming pools. Filling.of above-ground swimming pools by using a water hose that is connected and equipped with an approved non-removable type backflow preventer shall be permitted. Materials for water distribution and supply pipe, tubing and fittings shall conform to section P-809.

P-719.2 Installation. Drainage piping shall be installed in conformity with the provisions of this code governing direct and indirect sanitary drainage piping. In sewered areas, the drainage piping shall discharge to either sanitary or storm water drainage systems. In un-sewered areas, the drainage piping shall be in accordance with Chapter 14. In special cases, swimming pools drained or conducted to a point of disposal will be approved by the Department. Fixtures and drainage piping shall be vented in accordance with Chapter 11.

P-719.3 Conservation. Water conservation measures shall be taken in accordance with Section P-720.

SECTION P-720 WATER CONSERVATION

P-720.1 Definitions. The following terms shall, for the purpose of this section, have the meanings shown herein.

Approved. Means the approval of the Water Department or the Department of Licenses and Inspections.

Private Use. Applies to plumbing fixtures not for use by the general public.

Public Use. Applies to plumbing fixtures in all rest rooms containing sanitary facilities available to the general public or consisting of two or more water closets, and to plumbing fixtures in other facilities open for use by the general public.

P-720.2 Public use fixtures. All new and/or replacement plumbing fixtures for public use shall be of the water conservation type. These plumbing systems, or parts of systems, shall be equipped with water conservation equipment or devices which comply with the requirements of Sections P-720.2.1 through P-720.2.8.

P-720.2.1 Water closet tanks. Water closets equipped with tanks shall adequately flush and clean fixtures. These tanks shall discharge not more than 1.6 gallons per flush, and shall have a 1.6 gallon water level marker permanently affixed on the inside of the tank.

P-720.2.2 Water closet flushometers. Water closets equipped with flushometers shall adequately flush and clean fixtures. These flushometers shall discharge not more than 1.6 gallons per flush.

Exception: This restriction shall not apply to blowout type water closets.

P-720.2.3 Urinals. Urinals equipped with flushometers shall adequately flush and clean fixtures. These flushometers shall discharge not more than one gallon per flush.

Exception: This restriction shall not apply to blowout type urinals.

P-720.2.4 Lavatories. Lavatories shall be equipped with self-closing faucets, which remain open not more than 10 seconds.

P-720.2.5 Showers. Showers or showerheads shall be equipped with an approved water conservation device, which controls the volume of water so that it does not exceed three gallons per minute.

Exception: This restriction shall not apply to safety or deluge showers.

P-720.2.6 Sinks. Sinks shall be equipped with an approved water conservation faucet or device, which controls the volume of water so that it does not exceed three gallons per minute.

P-720.2.7 Water supply. The introduction of a new and/or replacement domestic water supply (water service) shall be controlled so that it does not exceed 60 pounds-per-square-inch (psi).

Exception: This restriction shall not apply to buildings containing a wet standpipe or sprinkler system for fire protection.

P-720.2.8 Other use. Except as already provided for by the previous subsections, all new and/or replacement plumbing fixtures and all points of domestic water discharge shall be equipped with water conservation type devices which control the volume of water so that it does not exceed three gallons per minute.

P-720.3 Air conditioning and refrigeration. All new and/or replacement air conditioning and refrigerating systems for public use having units rated in excess of five tons refrigerating capacity per 24 hours and using the public water supply, shall be equipped with a recapture system using evaporating condensers, cooling towers, spray ponds, or other water cooling equipment. Make-up water shall not be in excess of two-tenths gallons per rated ton of refrigerated capacity. No other method of recapture or re-use of cooling water may be employed without the approval of the Water Department and the Department of Licenses and Inspections.

P-720.4 Swimming pools. New swimming pools and/or alterations to plumbing fixtures in existing swimming pools for public or private use shall be equipped with a permanent water recirculating system.

Exception: This restriction shall not apply to swimming pools which are 3 feet or less in depth and 12 feet or less in diameter, or 12 feet or less in width and 12 feet or less in length.

P-720.5 Permanent car washes. All new or existing permanent commercial car wash facilities, which incorporate a pre-rinse cycle, shall be equipped with a permanent water recirculating system. The recirculating system shall recapture and recycle both pre-rinse and rinse cycle water.

P-720.5.1 Rinse cycle duration. Rinse cycles shall be 40 seconds or less per vehicle. This shall be accomplished by increasing conveyor speeds.

P-720.5.2 Water volume. The volume of water discharged from each water nozzle in the rinse cycle shall not exceed three gallons per minute.

P-720.5.3 Other measures. Additional measures to further reduce consumption shall be implemented wherever possible, such as reducing the number of water nozzles in the rinse cycle, using automatic flow control valves, and plugging all unnecessary outflows.

P-720.6 Hand car washes. All new and existing commercial and non-profit community car wash facilities that manually wash vehicles using hand controlled hoses shall equip each hose with an automatic shut-off-nozzle.

P-720.7 Ornamental water. New and/or replacement ornamental water facilities of any type shall be equipped with a permanent water recirculating system.

P-720.8 Private use fixtures. All new and/or replacement plumbing fixtures for private use shall be of the water conservation type. These plumbing systems, or parts of systems, shall be equipped with water conservation equipment or devices which comply with the requirements of Sections P-720.8.1 through P-720.8.6.

P-720.8.1 Water closet tanks. Water closets equipped with tanks shall adequately flush and clean fixtures. These tanks shall discharge not more than 1.6 gallons per flush, and shall have a 1.6-gallon water level marker permanently affixed on the inside of the tank.

P-720.8.2 Other fixtures. Lavatories, bathtubs, and other plumbing fixtures, shall be equipped with water conservation faucets or devices which control the volume of water so that it does not exceed three gallons per minute.

P-720.8.3 Showers. Showers and showerheads shall be equipped with an approved water conservation device, which controls the volume of water so that it does not exceed three gallons per minute.

P-720.8.4 Sinks. Sinks shall be equipped with an approved water conservation faucet or device, which controls the volume of water so that it does not exceed three gallons per minute.

P-720.8.5 Water supply. The introduction of a new and/or replacement domestic water supply (water service) shall be controlled so that it does not exceed 60 pounds-per-square-inch (psi).

P-720.8.6 Other use. Except as already provided for by the previous subsections, all new and/or replacement plumbing fixtures and all points of domestic water discharge shall be equipped with water conservation type devices which control the volume of water so that it does not exceed three gallons per

CHAPTER 8
WATER SUPPLY AND DISTRIBUTION

SECTION P-801 WATER SYSTEMS

P-801.1 Water supply required. Every building, structure, or premises in or on which plumbing fixtures are installed shall be equipped with an approved water supply system.

P-801.2 Separate supply. The water supply system for each building or structure shall be entirely separate and independent of every water supply system serving any other building or structure, except as provided in Sections P-801.2.1 through P-801.2.3.

P-801.2.1 Non-residential. Non-residential buildings and other structures on the same deeded property and maintained under common ownership shall be permitted to connect to a common water supply.

P-801.2.2 Residential. Residential structures on a single lot shall be permitted to share a single-source water supply, provided that each individual residential structure shall have its own master water supply shut-off for cold water and, if hot water is obtained from a central source, each dwelling unit shall have its own individual cutoff for domestic hot water supply. All residences on separate lots shall have separate water services.

P-801.2.3 Lot constraints. Where one building stands in the rear of another building on an interior lot and a separate water supply cannot be provided for the rear building through an alley, yard, or other open public space, the water supply of the front building shall be permitted to serve the rear building, provided the water supply of the front buildings is of adequate size and in suitable condition to serve both front and rear buildings. Such dual use requires approval by the Department.

SECTION P-802 QUALITY OF WATER SUPPLY

P-802.1 Potable water. All water for human consumption, for the preparation of food, or for washing humans, foods, food service equipment or utensils shall conform to Section 6-402(7) of the Health Code and the regulations promulgated thereunder.

P-802.2 Non-potable water. Non-potable water used for flushing water closets, urinals, or other purposes which do not conflict with Section P-802.1 shall provide for adequate protection to prevent human consumption. All piping therefor shall be adequately and durably identified by distinctive paint and prominent signs, so that it can be readily distinguished from piping carrying potable water. All water lines shall be inspected and approved by the Department. Signage indicating the non-potability of the water supply shall be placed at all points of public access to the water system, such as the tank openings and water closets.

SECTION P-803 ADEQUATE SUPPLY

P-803.1 Fixtures. Plumbing fixtures shall be provided with an adequate supply of water.

SECTION P-804 CROSS CONNECTIONS

P-804.1 Potable to non-potable. No cross connection shall be permitted between a potable water supply system and any other piping system.

P-804.2 City to non-City. No cross connection shall be permitted between the City water supply system and any other potable water system.

P-804.3 Air gap. A cross connection is considered broken if a minimum air gap of two water supply pipe diameters is provided between the potable water and any other piping system; or between the City water and any other potable water system.

P-804.4 Alternative device. On existing water supply systems where it is impractical to provide the required minimum air gap, a swing-joint swivel device or a 4-way, 4-port valve of a design such that the distribution piping is fed by either water supply individually, but not simultaneously, shall be considered by the Department and the Department of Public Health for approval.

P-804.5 Backflow prevention. The City or other potable water supply line shall be protected from backflow by means of a backflow preventer installation of a type and location approved by the Department and the Department of Public Health.

P-804.5.1 Installation. Cross connection control devices shall be installed, tested and maintained by persons certified in accordance with the requirements of the City of Philadelphia.

P-804.5.2 Permits. A plumbing permit shall be required for the installation of cross connection control devices.

SECTION P-805 UNDERGROUND WATER PIPE

P-805.1 Water service protection. When underground water service piping or water distribution piping and sewer or drain piping are laid in the same trench, the water service pipe or the water distribution pipe shall be laid on a bench or solidly tamped backfill at a level at least 12 inches above the top of the drainage pipe and at least 12 inches horizontally from the center line of the drainage pipe, and shall conform to Sections P-809 and P-904.4.

SECTION P-806 BACKFLOW PROTECTION

P-806.1 Required. Every potable water distribution and supply pipe shall be protected against backflow from any plumbing fixture or other piece of equipment or appliance capable of affecting the quality of the potable water by having the outlet end from which water flows spaced at a minimum distance of twice the diameter of the water supply pipe above the flood level rim of the receptacle into which the potable water flows.

P-806.1.1 Device. Where it is not practicable to provide this minimum air gap, the connection to the fixture equipment or appliances shall be equipped with a backflow preventer assembly of a type and location approved by the Department and the Department of Public Health and shall be installed between the control valve and the water outlet.

P-806.1.2 Increased protection. The Department and the Department of Public Health are authorized to require that a vacuum breaker or other backflow preventer of an approved type be installed at any fixed potable water outlet to which a hose is connected and used in contact with liquids or other substances which if added to the water supply would render it non-potable.

P-806.2 Backflow preventers. Backflow preventers approved by the Water Department shall be installed in all commercial, industrial and office buildings and in buildings containing more than four dwelling units. Installation, servicing, testing and repair of these backflow preventers on water lines not dedicated to fire suppression shall be under the supervision of a Master Plumber who is certified and trained in backflow prevention and cross connection control.

P-806.3 Fire suppression. Backflow preventers approved by the Water Department shall be installed on all new fire suppression systems. Installation, servicing, testing, repair and certification of these backflow preventers shall be under the supervision of a licensed Fire Protection Systems Contractor who is certified and trained in backflow prevention and cross connection control.

Exceptions:

1. Where systems are installed as a portion of the water distribution system in accordance with the requirements of the code and are not provided with a Fire Department connection, isolation of the water supply system shall not be required.
2. Isolation of the water distribution system is not required for deluge, preaction or dry pipe systems.

P-806.3.1 Additives or nonpotable source. Where systems under continuous pressure contain chemical additives or antifreeze, or where systems are connected to a nonpotable water supply, the potable water supply shall be protected against backflow by a reduced pressure principle backflow preventer. Where chemical additives or antifreeze are added to only a portion of an automatic fire sprinkler or standpipe system, the reduced pressure principle backflow preventer shall be permitted to be located so as to isolate that portion of the system. Where systems are not under continuous pressure, the potable water supply shall be protected against backflow by an air gap or a pipe applied atmospheric vacuum breaker conforming to ASSE 1001 or CAN/CSA B64.1.1.

P-806.4 Lawn sprinklers. Lawn sprinkler systems shall be equipped with protective devices as required in this section. From a point outside the foundation wall throughout the lawn sprinkler system, the method of installation and the material used shall not be subject to this code.

SECTION P-807 PUMPS, WELLS, AND OTHER APPLIANCES

P-807.1 Provisions. All water pumps, tanks, filters, softeners, and similar appliances and devices shall be protected against contamination. Where outdoor hydrants are installed at surface grade, such installations shall be on concrete

or other impervious platforms with a top surface not less than 6 inches above the adjoining grade and extending not less than 3 feet in all directions from the hydrants. The drains from frost-proof hydrants shall spill on grade, discharge to independent seepage pit, or discharge to indirect waste in accordance with Section P-1201.2.

SECTION P-808 WATER SUPPLY TANKS

P-808.1 Required. A water supply system shall be supplemented from a gravity house tank, pressure tank, or booster pump system when the water pressure from the public water main or other potable water line is insufficient to supply the fixtures of the water supply system which are likely to be in simultaneous operation at the residual pressures specified in Section P-811.1.

P-808.2 Protection. All potable water supply tanks shall be properly covered or sealed to prevent the entrance of foreign or contaminating material into the water supply. Soil or waste lines shall not pass directly over non-pressure water supply tanks or over manholes in pressure tanks.

P-808.3 Cleaning, lining, painting or repairing potable water supply tanks. A potable water supply tank from which water for human consumption is drawn shall not be lined, painted, or repaired with any material which may affect either the taste or potability of water supplied from such tank when the tank is returned to service. Tanks shall be disconnected from the water distribution system whenever necessary to prevent a foreign fluid or substance from entering such system during any such operation or from any other source.

P-808.4 Disinfection of potable water supply tanks. After a potable water supply tank has been installed, cleaned, painted or repaired, it shall be disinfected by filling it with a solution containing 100 ppm of available chlorine and allowing it to stand for two hours before the tank is flushed and returned to use.

P-808.5 Protection against freezing. All water pipes, water tanks, and water-supplied appliances and devices subject to freezing temperatures shall be effectively protected against freezing.

P-808.6 Overflow for water supply tanks. Overflow outlets for gravity tanks shall not be less than 4 inches below the tank supply and shall discharge at least 6 inches above a roof or within 6 inches of a floor drain or they shall discharge over and above the flood level rim of an open water supplied sink or other approved receptacle having a trap with a diameter equal to that of the overflow pipe.

P-808.6.1 Screening. Overflow pipes shall be properly screened against the entrance of insects or vermin.

P-808.6.2 Outlets. Overflow outlets shall terminate in a horizontal position above a roof or in a turned-down position above a sink or receptacle.

P-808.6.3 Sizing. Overflows shall be sized as specified in Table P-808.

P-808.7 Drains. All water supply tanks shall be provided with valved drain lines located at or near their lowest point and discharged as an indirect waste or as required for overflow pipes in Table P-808. Each tank shall be provided with pipes of diameters specified in Table P-808. Each drain shall be equipped with a gate valve or ball valve of the same diameter as the pipe.

TABLE P-808 — WATER SUPPLY TANK DRAINS AND OVERFLOWS

Tank Capacity (Gallons)	Minimum Size Drain Pipe (Inches)	Minimum Size Overflows
Up to 750	1-1/4	One size larger than supply pipe
75 to 1500	1-1/2	
1501 to 3000	2	
3001 to 5000	2-1/2	
5001 to 7500	3	One size larger than supply pipe (Minimum size 4”)
Over 7500	4	

SECTION P-809 MATERIAL FOR WATER PIPE, TUBING AND FITTINGS

P-809.1 Above ground. Subject to the requirements hereinafter set forth, material for water piping above ground shall be of brass, type “M” copper or heavier, cast iron, galvanized steel, galvanized yoloy, galvanized malleable iron split couplings (victaulic), stainless steel (409 type “H” copper-coated), polybutylene cold water pipe, or plastic water pipe with appropriate approved fittings conforming to the applicable specifications listed in Section P-305.

P-809.2 Dwellings. Chlorinated polyvinyl chloride (CPVC) piping shall be permitted for domestic hot and cold water service in buildings that house no more than three dwelling units and alternative housing designs such as single room occupancies with a maximum of 10 beds. All connections to domestic hot water heating equipment shall have a developed length of 4 feet of copper pipe.

P-809.3 Special use. Distilled water and deionized water piping shall be stainless steel or tempered borosilicate glass.

P-809.4 Below ground. Water distribution piping and water piping underground shall be of brass, type "L" copper or heavier, cast iron, or plastic cold water pipe. Temp-tite pressure pipe (epoxy-lined transites core pipe) may be used underground only. All underground water pipe installation shall conform with Sections P-805 and P-902.3.

P-809.5 Grounding. The use of any plastic water supply piping shall negate the use of the water service as an electrical grounding electrode.

P-809.6 Pressure. All materials for aboveground and belowground use shall be suitable for 150 lbs. working pressure.

P-809.7 Corrosive soils. When used underground in corrosive soil, all metallic pipe and fittings shall be tar enamel coated or protected in an equivalent approved manner against external corrosion.

P-809.8 Lawn sprinklers. From a point outside the foundation wall throughout a lawn sprinkler system, the method of installation and the material used shall be at the discretion of the designer.

P-809.9 Water service. All water service piping from the City water main to the curb line shall conform to the regulations as set forth by the Water Department.

P-809.10 Flexible pipe. Polybutylene flexible pipe shall be permitted in alteration work to supply water closets and hot and cold water to a lavatory, provided the building contains not more than four dwelling units and is not over three stories in height. The basement is not considered a story height.

P-809.11 Reactive materials. No piping material shall be used to convey potable water where reaction between such material and the water may cause the potable water supply to become toxic or otherwise unsuitable for human consumption.

P-809.12 Re-use. Piping or fittings that have been used for other than potable water supply shall not be used in a potable water supply system.

SECTION P-810 WATER PIPING AND SHUT-OFF VALVES

P-810.1 Water service. The water service pipe from the street main and the water distribution pipe shall be of sufficient size to furnish an adequate flow of water to meet the requirements of the building at peak demands, and in no case less than 3/4-inch nominal diameter.

P-810.2 Water supply control. A main shut-off or curb stop on the water service pipe shall be provided near the curb, and an accessible shut-off valve shall be provided near the curb, and an accessible shut-off valve shall be provided inside near the point where the water distribution pipe enters the building or other structure. Supply lines taken from pressure or gravity tanks shall be valved at or near their source.

P-810.3 Secondary shut-off valves. Separate valves, readily accessible, shall be placed at the foot of each riser line, on all branches to exterior hose bibbs, on hot water storage tanks, and on supplies to fixtures. All valves shall be the same size as the pipe in which they are installed and shall be installed on all risers and all branch lines to fixtures. Where shut-off valves are concealed in construction, an access panel shall be provided. If the construction is fire-resistance rated, the access panel shall be a labeled door of the required fire-resistance rating. Installation of access panels in stairway enclosures is prohibited.

P-810.4 Draining of water pipe. The formation of traps or sags shall be avoided where possible. When this is unavoidable, such sags, traps, or inverts shall have provisions for draining.

P-810.5 Stagnant water. Water piping to drinking fountains or other water piping conveying water intended for human consumption shall not be connected to standpipes, sprinkler risers, or other piping in which stagnant water may collect.

SECTION P-811 WATER SUPPLY FIXTURES

P-811.1 Minimum pressure. Except when special equipment requires higher pressure, the minimum residual water pressure maintained reasonably constant at a water outlet shall be 20 pounds at direct flush valves (flushometer) on blowout action fixtures, 10 pounds at direct flush valves (flushometer) on syphonic action fixtures, and 8 pounds at other water-supplied plumbing fixtures.

P-811.1.1 How measured. The residual pressure shall be measured at the pressure side of the water outlet with the outlet fully open.

P-811.1.2 Fluctuations. Where the water main is subject to fluctuation in pressure, the water supply system shall be designed for the minimum pressure available.

P-811.2 Minimum size of fixture supply pipes. Minimum sizes of fixture supply pipes shall be as listed in Table P-811.2.

P-811.2.1 Provisions. The size of the water fixture supply pipe shall be the full nominal diameter as prescribed in Table P-811.2 and shall be installed undiminished in pipe size to the floor or wall directly adjacent to the fixture it is intended to serve. Flexible water pipe connectors used in connecting the water supply pipe to fixture faucets and which provide a rigid joint when made up shall not be considered a reduction in pipe size.

P-811.3 Minimum water supply sizes to flushometers. The maximum number of water closet flush valves allowed to be supplied from a single source shall conform to the schedule of pipe sizes and water pressures listed in Table P-811.3.

P-811.3.1 Length adjustment. If the distance from the fixture to the pneumatic tank or underground main is in excess of 500 feet, deduct 10 psi from the tank or main pressure.

P-811.3.2 Height adjustment. For each floor above the first floor, deduct 10 psi from the tank or main pressure.

P-811.3.3 Urinals. Two urinals shall be counted as one water closet.

P-811.4 Existing installations. On existing installations, the water supply connected to flushometers shall be permitted without increasing the size of the ferrule, provided a tank is installed on the water line and is sized in accordance with Table P-811.4. The tank shall be equipped with a valve on the water inlet, an air inlet valve at its top, and a drain valve.

TABLE P-811.2 — MINIMUM SIZE OF WATER FIXTURE SUPPLY PIPES

Fixture Pipe	Fixture Supply (inches)
Bathtubs	1/2
Combination Sink and Tray	1/2
Dishwashing Machine, Domestic	1/2
Drinking Fountain	3/8
Flushing Rim Sink	3/4
Hose Bibb	1/2
Hot Water Tanks, Domestic	1/2
Kitchen Sink, Hotel or Public	3/4
Laundry Trays	1/2
Lavatories	3/8
Service Sink	1/2
Shower, Multi-Stall	3/4
Shower Stalls	1/2
Urinal, Pedestal, Direct Flush Valve (Flushometer)	1
Urinal, Stall, Blow-out or Wash-out; Direct Flush Valve (Flushometer)	3/4
Urinal Tank	3/8
Wash Fountain, Duo	1/2
Wash Fountain, all other	3/4
Washing Machine, Domestic	1/2
Water Closet Direct Flush Valve (Flushometer)	1
Water Closet Tank	3/8

TABLE P-811.3 — MINIMUM WATER SUPPLY SIZES TO FLUSHOMETERS[a]

First Floor Above Ground[b]							
Pneumatic Tank or Underground Main Pressure Using Iron Pipe	**Ferrule Size**						
	1”	**1-1/2”**	**2”**	**3”**	**4”**	**6”**	**8”**
30 psi		1 (200’)	2	12	50	180	450
40 psi	1 (25’)	1 (400’)	4	24	80	220	450
50 psi	1 (50’)	1	7	40	110	220	450
60 psi	1 (75’)	2	7	40	110	220	450
70 psi	1 (100’)	3	7	40	110	220	450
First Floor Above Ground[b]							
Pneumatic Tank or Underground Main Pressure Using Copper Tubing	**Ferrule Size**						
	1”	**1-1/2”**	**2”**	**3”**	**4”**	**6”**	**8”**
30 psi		1 (250’)	3	15	55	200	450
40 psi	1 (30’)	1 (500’)	6	30	110	220	450
50 psi	1 (65’)	2	9	40	110	220	450
60 psi	1 (100’)	3	9	40	110	220	450
70 psi	1 (135’)	4	9	40	110	220	450

Note a: Numbers shown in parentheses designate maximum allowed distance of fixtures from pneumatic tank or underground main.

Note b: See Section P-811.3.2

TABLE P-811.4 — MINIMUM SIZE OF TANK (GALLONS)

Street Pressure [a]	Number of Water Closets				
	1	2	3	4	7
30 psi	150	170	190	210	300
40 psi	60	70	80	90	120
50 psi	40	50	60	0	90
50 psi	35	40	50	60	70

Note a: Deduct ½ psi from street pressure for each foot that fixtures are located above the bottom of the tank. Two urinals equal one water closet.

SECTION P-812 TEMPERATURE AND PRESSURE RELIEF VALVES

P-812.1 Pressure relief. An approved pressure relief valve shall be installed on all equipment used for heating or storing hot water and which forms part of a water supply system. The rate of discharge of such valve shall limit the pressure rise in the water supply system to 10% above the pressure at which the valve is set to open. Pressure relief valves shall be of the spring-loaded type with a pull rod and lever handle, or shall be of an equivalent approved type which will permit the manual operation and testing of the valve. Pressure relief valves shall be installed in the cold water supply to the heater or storage tank and adjacent to such heater or storage tank. In addition, an approved backflow preventer shall be installed on all equipment which is connected to the potable water supply when such equipment is used for any purpose other than supplying potable water to approved fixtures or as required by the Department.

P-812.2 Temperature relief. An approved temperature relief valve shall be installed on all equipment used for heating or storing hot water and which forms part of a water supply system. When the temperature of the water within the vessel to which such relief valve is connected reaches 210°F, the valve shall automatically discharge sufficient hot water to prevent any further rise in the temperature. Each temperature relief valve shall be rated in terms of the maximum permissible hourly BTU input which the valve can safely relieve, and such rating shall be plainly stamped, etched, or cast on the valve or on a permanent nameplate securely attached to the valve. Temperature relief valves shall be installed in the hot water connection to the heater or storage tank in such a manner that the stem of the temperature-sensing element will project at least one inch into the tank.

P-812.3 Vacuum relief valves. Copper tanks shall be provided with vacuum relief valves. Vacuum relief valves shall be placed at or as close as possible to the tanks, which they are intended to protect.

P-812.4 Combined temperature and pressure relief. A combination pressure and temperature relief valve of an approved type shall be accepted in lieu of separate valves, provided it meets the requirements for separate valves. The combined relief valve shall be located as a temperature relief valve and shall be installed in the hot water connection to the heater or storage tank in such a manner that the stem of the temperature-sensing element will project at least one inch into the tank.

P-812.5 Approval. No pressure relief valve or temperature relief valve shall be installed after the effective date of this code, unless it is a type which has been approved by the Department and is installed in conformity with the conditions of approval. Relief valves which meet the requirements of this code shall be approved by the Department without additional tests, provided that they have been tested and labeled by an approved agency and conform to ANSI Z21.22-86.

SECTION P-813 INTERMEDIATE SHUT-OFFS

P-813.1 Conditions. No stop-cock, valve, or check valve shall be installed between a hot water storage tank and a required pressure relief valve. No shut-off valve or stop-cock shall be installed in circulator lines between water heaters and hot water storage tanks, except in a summer and winter hook-up.

SECTION P-814 CHECK VALVES

P-814.1 Hot water systems. Check valves shall not be installed anywhere in the cold water supply pipe leading to an existing water heating system unless:

1. Suitable pressure relief valves and temperature relief valves are also installed; and
2. Where copper tanks are used, a suitable vacuum relief valve is installed at or adjacent to the copper tank.

SECTION P-815 RELIEF OUTLET CONNECTIONS

P-815.1 Method. When the relief outlets of relief valves are connected by piping to discharge into the drainage system, such pipe shall be connected as an indirect waste. Piping from the relief outlets shall be equal to or greater than the cross-sectional area of the discharge outlet on the relief valve and shall discharge within six inches of the floor.

P-815.2 Residential. Drip pans under hot water heaters located in apartments shall be piped to an indirect waste line. In high-rise apartments, this condensate shall be carried down to the lowest level and discharged to an indirect catch basin or fixture having a minimum size equal to the indirect waste riser accepting one or more drip pans, but in no case less than 1-1/4 inch.

[THIS PAGE IS INTENTIONALLY BLANK]

CHAPTER 9
SOIL AND WASTE PIPING

SECTION P-901 GENERAL REQUIREMENTS

P-901.1 Discharge. The discharge from all plumbing fixtures and other sanitary drains on the premises shall be drained through properly installed piping to the public sewage system, or as prescribed in Sections P-1401 or P-1203.2.3.

P-901.1.1 Transformer vault. No piping connected to the plumbing system shall be installed in any transformer vault.

Exceptions:

1. A floor drain which discharges to an independent seepage pit and to a location approved by the Department or;
2. A floor drain which discharges to an indirect waste pipe located on the exterior of the transformer vault, and the indirect drainage piping is in accordance with Chapter 12.

P-901.2 Special waste. In special cases, such as baptismal fonts, the Department is authorized to approve waste water which discharges to the earth.

P-901.3 Required. Every building, structure or other premises in or on which liquid or water-borne wastes accumulate shall be equipped with an approved drainage system to convey all liquid or water-borne wastes to a public sewer, provided that, where a public sewer is not available, other approved provisions shall be made for disposing of such waste in conformance with applicable laws, ordinances, rules and regulations. Where a public sewer is not available, residences which connect to an approved private sewer through a house trap shall be approved.

P-901.4 Separate systems. The drainage system for each building or structure shall be entirely separate and independent of every building drainage system serving any other building or structure, except as provided in Sections P-901.4.1 and P-901.4.2.

P-901.4.1 Non-residential. Non-residential buildings and other structures on the same deeded property and maintained under the same ownership shall be permitted to connect to the same house drain.

P-901.4.2 Residential. Where one building stands in the rear of another building on an interior lot and a separate house drain cannot be provided for the rear building through an alley, yard, or other open public space, the house drain of the front building shall be permitted to serve the rear building, provided the house drain of the front building is of adequate size and in suitable condition to serve both front and rear buildings. Such dual use requires approval by the Department.

P-901.5 Existing drains. Existing house drains shall not be used to serve new buildings until they have been examined by, and tested under the direction of the Department, and approved for such use.

P-901.6 Lowest level. Except in one-family dwellings, the drainage from all plumbing fixtures located at the basement or cellar level shall be connected to the horizontal piping of the house drain or to a properly vented horizontal branch pipe. This shall apply to the lowest level of a building, containing a slab or grade. Such fixtures are permitted to connect to a vertical soil and waste stack, provided no fixtures are connected to the vertical soil or waste stack above the basement or cellar level.

SECTION P-902 MATERIALS

P-902.1 Soil and waste piping above ground within buildings. Soil and waste piping for drainage systems within a building, other than underground drains, shall conform to one of the standards listed in Table 902.1.

TABLE P-902.1 — ABOVE-GROUND DRAINAGE AND VENT PIPE

MATERIAL	STANDARD
Acrylonitrile butadiene styrene (ABS) plastic pipe	ASTM D 2661; ASTM F 628; CSA B181.1
Brass pipe	ASTM B 43
Cast-iron pipe	ASTM A 74: ASTM A 888: CISPI 301
Coextruded composite ABS DWV schedule 40 IPS pipe (solid)	ASTM F 1488
Coextruded composite ABS DWV schedule 40 IPS pipe (cellular core)	ASTM F 1488
Coextruded composite PVC DWV schedule 40 IPS pipe (solid)	ASTM F 1488
Coextruded composite PVC DWV schedule 40 IPS pipe (cellular core)	ASTM F 891; ASTM F 1488
Coextruded composite PVC IPS-DR, PS 140, PS200 DWV	ASTM F 1488
Copper or copper-alloy pipe	ASTM B 42; ASTM B 302
Glass pipe	ASTM C 1053
Polyolefin pipe	ASTM F 1412; CAN/CSA B181.3
Polyvinyl chloride (PVC) plastic pipe (Type DWV)	ASTM D 2665; ASTM D 2949; ASTM F 1488; CSA B181.2
Stainless steel drainage systems, Types 304 and 316L	ASME A112.3. 1

P-902.2 Underground sanitary drains. Underground building sanitary drainage within a building and beyond the building wall shall conform to one of the materials and standards listed in Table P-902.2. Drainage systems for corrosive industrial wastes shall be of acid-resisting cast iron or other material that is resistant to corrosion and degradation for the concentrations of chemicals involved.

TABLE P-902.2 — UNDERGROUND SANITARY DRAINAGE AND VENT PIPE

MATERIAL	STANDARD
Acrylonitrile butadiene styrene (ABS) plastic pipe	ASTM D2661; ASTM F628: CSA B181.1
Cast iron pipe	ASTM A 74; ASTM A 888; CISPI 301
Coextruded composite ABS DWV schedule 40 IPS pipe (solid)	ASTM F 1488
Coextruded composite ABS DWV schedule 40 IPS pipe (cellular core)	ASTM F 1488
Coextruded composite PVC DWV schedule 40 IPS (solid)	ASTM F 891; ASTM F 1488
Coextruded composite PVC DWV schedule 40 IPS (cellular core)	ASTM F 891; ASTM F 1488
Coextruded composite PVC IPS-DR, PS140, PS200 DWV	ASTM F 1488
Concrete pipe [a]	ASTM C 14; ASTM C 76; CSA A 257.1; CSA A 257.2
Copper or copper-alloy tubing (Type K, L, M, or DWV)	ASTM B 75: ASTM B 88: ASTM B 251; ASTM B 306
Ductile iron	AWWA C 151
Polyolefin pipe	ASTM F 1412; CSA B181.3
Polyvinyl chloride (PVC) plastic pipe (Type DWV)	ASTM D 2665; ASTM D 2949; CSA B181.2
Stainless steel drainage systems, Type 316L	ASME A112.3.1
Vitrified clay pipe [a]	ASTM C 4; ASTM C 700

Note a: Not permitted underground within buildings nor within 10 feet of the building foundation.

902.3 House drains. House drains shall be installed in accordance with the provisions of Sections P-902.3.1 through P-902.3.3.

P-902.3.1 In separate trench. For house drains installed beyond the building wall in a trench separate from water service or water distribution pipe, the drain pipe shall be of cast iron hard temper copper tube of a weight not less than type "L", vitrified clay pipe, concrete, or plastic. If the drain consists of plastic materials, the underground water service or water distribution pipe and the house drain shall be not less than 10 feet apart horizontally and shall be separated by undisturbed or compacted earth, or shall be in accordance with Section P-805 when approved by the Department.

P-902.3.2 In shared trench. For house drains installed beyond the building wall in a trench with water service or water distribution pipe, the drain pipe shall be of cast iron or hard temper copper tube of a weight not less than type "L". The water pipe shall be laid on a bench or on a solidly tamped back-fill at a level at least 12 inches above the top of the drainage pipe and at least 12 inches horizontally from the center of the drainage pipe.

P-902.3.3 Unstable soil. When a house drain is installed in filled or unstable ground, it shall be of cast iron or hard temper copper tube of a weight not less than type "L". Pipe shall be supported on concrete piers, seven feet apart, or a constant bed of concrete or clevis hangers attached to reinforcing rods in the concrete floor above the piping.

P-902.4 Fittings. Approved drainage type fittings shall be used on all drainage piping. Pipe and fittings shall conform to the applicable standards in Section P-305.

P-902.5 Plastic pipe. The use of ABS plastic pipe and PVC plastic pipe authorized by Sections P-902.1 and P-902.2 shall be limited to use only in connection with buildings containing dwelling units that house from one to four families and that do not exceed three stories in height. For the purpose of this section, basements are not considered a story height.

P-902.6 Chemical waste system. A chemical waste system shall be completely separated from the sanitary drainage system. The chemical waste shall be treated in accordance with Section P-1205.2 before discharging to the sanitary drainage system. Separate drainage systems for chemical wastes and vent pipes shall be of an approved material that is resistant to corrosion and degradation for the concentrations of chemicals involved.

SECTION P-903 INSTALLATIONS

P-903.1 Fall for small piping. Horizontal drainage piping of 3-inch diameter and less shall be installed with a fall of not less than 1/4 inch per foot.

P-903.2 Fall for large piping. Horizontal drainage piping of more than 3 inches and up to and including 6 inches in diameter shall be installed with a fall not less than 1/8 inch per foot. Horizontal drainage piping larger than 6-inch diameter shall be installed with a fall of not less than 1/16 inch per foot.

P-903.3 Special slope. Where conditions do not permit house drains or sewer to be laid with a fall as great as that specified, the Department shall approve a lesser slope, provided the computed flow velocity is not less than 2 feet per second.

P-903.4 Minimum cover: Traps on underground drainage piping installed outdoors or where subject to frost action shall have a minimum cover of 3 feet.

P-903.5 Building clearance. Underground drainage piping installed parallel to a foundation wall shall be at least 3 feet from the building foundation wall when the depth does not exceed 4 feet. One foot of additional distance from the foundation wall shall be required for each additional 1-foot depth below 4 feet.

P-903.6 Changes in direction. Changes in direction in drainage piping shall be made by the appropriate use of 45-degree wyes; long or short-sweep bends; sixth, eighth, or sixteenth bends; or by combinations of equivalent fittings. Single and double sanitary tees shall be used in drainage lines only where the flow is from the horizontal to the vertical. Tees and crosses shall be permitted in the vent and water distribution systems.

P-903.7 Fittings. No single or double-tee branch shall be used as a drainage fitting. No bands, saddles, or quarter bends shall be used in the drainage system. Repair plates shall be permitted in existing drainage and vent systems. No drain, drainage, or vent piping shall be drilled or tapped on new work. With approval by the Department, drilling or tapping with the use of a repair plate shall be permitted on an existing stack, provided that there are no fixtures above. A quarter bend shall be permitted on sanitary drainage piping but only when installed in lieu of an ideal bend having no side outlets for receiving small fixture drains. A quarter bend shall be permitted when installed

as a replacement fitting on rainwater only, with the approval of the Department. Any fitting or connection that offers abnormal obstruction to flow through a drain is prohibited.

P-903.8 Repair of main drain. A cast iron double hub fitting and sission joint using lead and oakum is acceptable for the repair of a main drain line which is broken inside the building, with approval of the Department.

P-903.9 Optional method of joining cast iron underground piping within an existing building. A cast iron hubless coupling which consists of a cast iron housing, stainless steel nuts and bolts and a neoprene gasket shall be permitted beneath a building with special conditions when approved by the Department.

SECTION P-904 SIZES

P-904.1 Fixture-Unit values. The relative load weights of fixtures shall be determined in accordance with Table P-904.1. For the purpose of this section:

1. Private installations shall mean those installations which are not generally available to members of the public; and
2. Public installations shall mean those installations available to the public.

P-904.2 Values for fixtures not listed. Fixture unit values for fixtures that are not listed in Table P-904.1 and cannot be determined by similarity to a fixture listed therein shall be determined by Table P-904.2.

P-904.3 Values for continuous flow. For a continuos or semi-continuous flow in a sanitary drainage system, such as from a bilge pump, ejector, air conditioning equipment, commercial laundry, dishwashing equipment, or similar device, each gallon per minute flow shall be deemed to be two fixture-units.

P-904.4 Maximum fixture-unit load. The maximum number of fixture-units connected to a given size of house drain, horizontal branch, or vertical soil or waste stack, shall be determined by Table P-904.4.

P-904.4.1 Soil stack size. The size of a soil or waste stack is determined by the fixture-units on the stack plus the fixture-units on the horizontal branch from the base of the soil or waste stack connected to the house drain.

P-904.4.2 Horizontal branch size. The size of the horizontal branch from the base of the soil or waste stack connected to the house drain is determined by the fixture-units and gradient fall.

P-904.4.3 House drain size. The size of the house drain is determined by its gradient fall and total number of fixture-units.

P-904.4.4 High-rise buildings. If the building is 75 feet in height and not more than 160 feet in height above the grade level at the curb, the vertical soil or waste stacks connected to the house drain or to any of its branches shall be one size larger than given in Table P-904.4, and this shall also apply when the soil or waste stacks are connected to a horizontal branch pipe that discharges into a soil or waste stack. If the building is more than 160 feet in height, the vertical soil or waste stacks connected to the house drain or to any of its branches shall be two sizes larger than given in Table P-904.4, and this shall also apply when the vertical soil or waste stacks are connected to the horizontal branch pipe that discharges into a soil or waste stack. The size of the main soil stack shall be sized according to the largest branch entering the stack, except if the amount of fixture units requires a larger size. The developed length of the soil or waste stacks shall be determined by measuring the distance between the center line of the horizontal branch pipe and the roof. If a relief vent is installed on all horizontal branches below the top floor and between the soil or waste stacks and the first fixture on the horizontal branch, the soil or waste stack sizes shall be in accordance with Table P-904.4, regardless of the height of the building. The size of the branch line and its stack shall be determined by the developed length of the stack. (See Figure P-1101.0)

TABLE P-904.1 — FIXTURE UNIT VALUES

Fixtures	Private Installations	Public Installations
Bathroom group consisting of 1 lavatory, 1 water closet, 1 bathtub or shower stall	6	—
Bathtub with 1-1/2 inch trap [a]	2	3
Bathtub with 2-inch trap [a]	3	4
Cup Sink	—	2
Diswashers, domestic, automatic	4	—
Drinking Fountain	—	1/2
Floor Drain	3	3
Kitchen Sink with 1-1/2 inch trap [b]	3	3
Kitchen Sink with 2-inch trap [b]	—	4
Laundry tray with 1-1/2 inch trap (1 or 2 compartment)	3	3
Laundry tray with 2-inch trap	—	4
Lavatory with 1-1/4 inch or 1-1/2 inch trap	1	2
Lavatory, Barber, Beauty, Parlor, or Surgeons	—	3
Service Sink (slop sink), Mop Receptor	—	3
Service Sink, flushing rim with flush valve	—	6
Shower Stall with 1-1/2 inch or 2 inch trap	2	3
Shower Stall with required 3-inch trap	—	6
Urinal, stall and washout	—	4
Urinal, pedestal, siphon-jet, and blow-out	—	6
Urinal Trough; for each 5 feet	—	2
Wash Fountain, Duo	—	2
Wash Fountain, any other size	—	5
Washing Machine, domestic, automatic	4	—
Water Closet	4	8
Fountain Cuspidor (Dental Chair)	—	1
Sink, Soda Fountain or Bar	—	2

Note a: With or without shower head over bathtub.
Note b: With or without garbage grinder unit, or dishwasher, in sink with 1-1/2 or 2-inch trap.

TABLE P-904.2 — OTHER FIXTURE VALUES

Required Fixture Drain or Trap Size	Fixture Unit Value	
	Private Installations	Public Installations
1-1/4 inch	1	2
1-1/2 inch	2	3
2-inch	3	4
3-inch	4	6
4-inch	4	8

TABLE P-904.4 — MINIMUM PIPE SIZES ACCORDING TO FIXTURE LOAD
(Maximum Fixture-Units that may be connected)

House Drain or Horizontal Branch					Vertical Soil or Waste Stack
Pipe size (Inches)	**1/16" Fall**	**1/8" Fall**	**1/4" Fall**	**1/2" Fall**	
1¼			2	2	
1½			4	6	6
2			10	18	20
2½			27	36	36
3			48[a]	65[a]	75[b]
4		50	100	200	225
5		130	225	420	480
6		330	480	875	1,015
8	500	850	1,100	2,000	2,320
10	1,050	1,650	2,320	3,800	4,500
12	1,800	3,000	4,500	6,500	8,100
15	3,600	6,000	8,100	10,000	13,600

Note a: Limit 2 water closets.
Note b: Limit 6 water closets.

TABLE P-904.7 — MINIMUM REQUIREMENTS FOR COMMERCIAL INSTALLATIONS

Fixture	Trap & Waste (Inches)		Indirect Waste	Backlflow Preventer	Grease Trap
3-CompartmentBar Sink	1-1/4		Yes		
3-Compartment Pot Sink	2				Yes
Beer Dispenser Trough	1		Yes		
Chinese Wok	2		Yes	Yes	Yes
Coffee Urn	1		Yes	Yes	
Dental Chair	1-1/4			Yes	
Dishwasher	2			Yes	
Floor Drain	3				
Food Display Case	1		Yes		
Foot Preparation Sink	2		Yes		
Ice Cream Dipper Well	1		Yes		
Ice Machine	1-1/4		Yes	Yes	
Ice Storage Bin	1-1/4		Yes		
Lavatory, Public Toilet	1-1/4		Self-closing faucet, except handicapped		
Medical Sink/ Lavatory	Elongated lever handles or foot control on faucet				
Mop Receptor	3		Yes		
Pre-rinse for Dishwasher	2		Yes	Yes	
Service Sink	3		Yes		
Shampoo Sink	1-1/4		Yes		
Soda Carbonation Station Supplied With Water		Yes	Yes		
Soda Dispenser Trough	1	Yes			
Vacuum Pump (Dental Office)		Yes			
Walk-in Freezer	1-1/4	Yes	No floor drain inside box		
Walk-in Refrigerator	1-1/4	Yes			
Water Closet, Public	Elongated bowl, open front seat				

P-904.5 Minimum size of soil and waste pipe. No soil or waste stack shall be smaller than the largest branch draining into it regardless of the height of the building. Soil stacks receiving the discharge of water closets shall not be less than 3 inches in diameter, as provided in Table P-904.4. Three-inch Soil stacks shall be limited to two water closets. No horizontal soil pipe or waste pipe draining pedestal urinals or water closets shall be less than 3 inches in diameter. When using 3-inch ideal bends (closet bends) to receive the discharge of water closets, this fitting shall be a blind bend containing no drainage connections for other fixtures. No waste pipe shall be less than 1-1/4 inches in diameter except that waste pipe drip lines from soda fountains, coffee urns and refrigerator cases shall be minimum 1-inch nominal diameter and not over 12 feet in length when trapped and discharged into an open fixture. Fixture branch pipes shall conform to Section P-506.

P-904.5.1 Main house drain. The minimum size of the main house drain receiving the discharge of water closets shall be 4 inches inside nominal diameter.

P-904.6 Future fixtures. When provision is made for the future installation of fixtures, drainage pipes shall be of sizes which will accommodate future fixtures, and the construction to provide for such fixture installation shall be terminated with a plugged fitting at the stack, so as not to form a dead end, and shall be vented as prescribed in Chapter 11.

P-904.7 Minimum requirements. Minimum requirements for commercial installations shall be in accordance with Table P-904.7.

Figure P-904.7

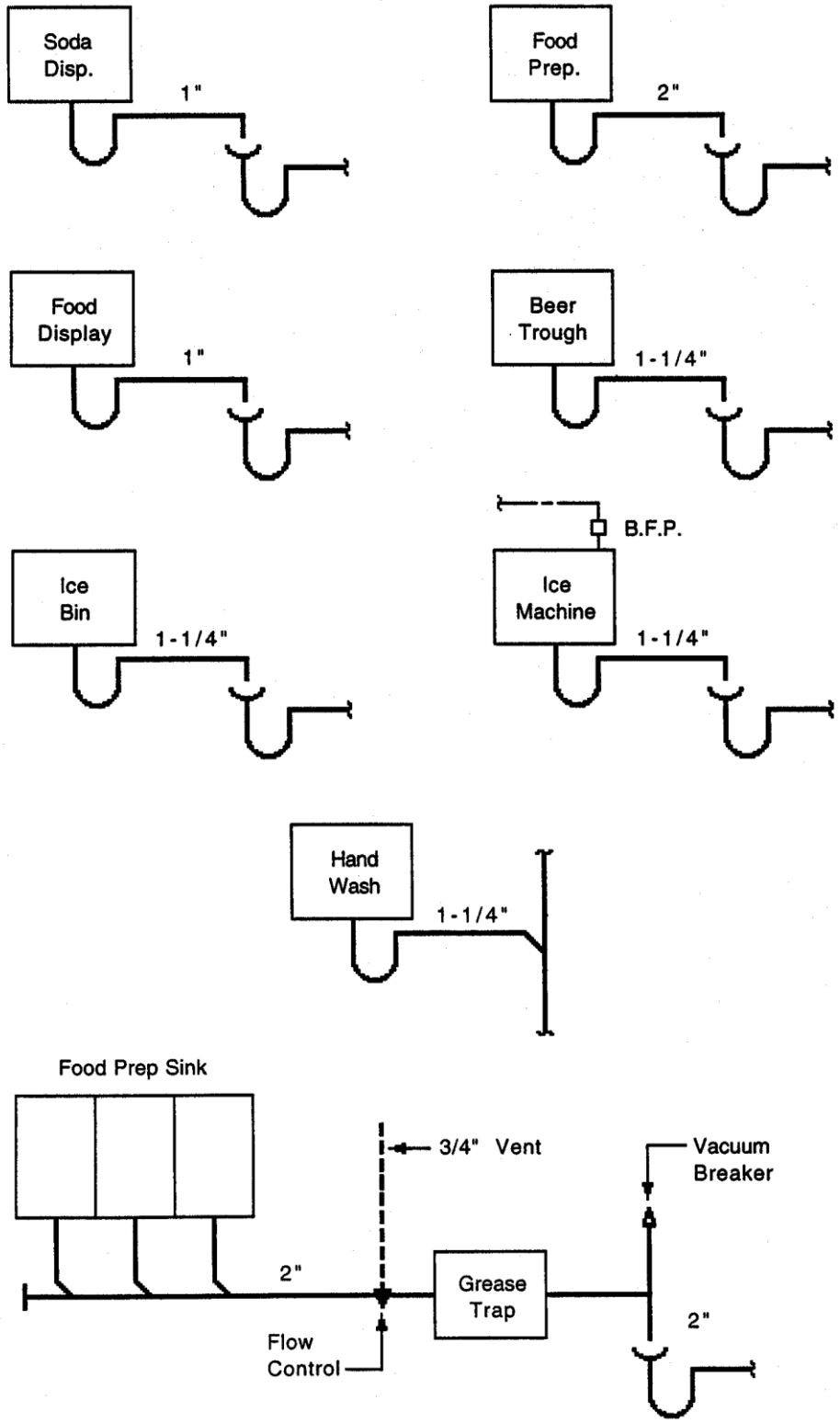

Figure P-904.7a

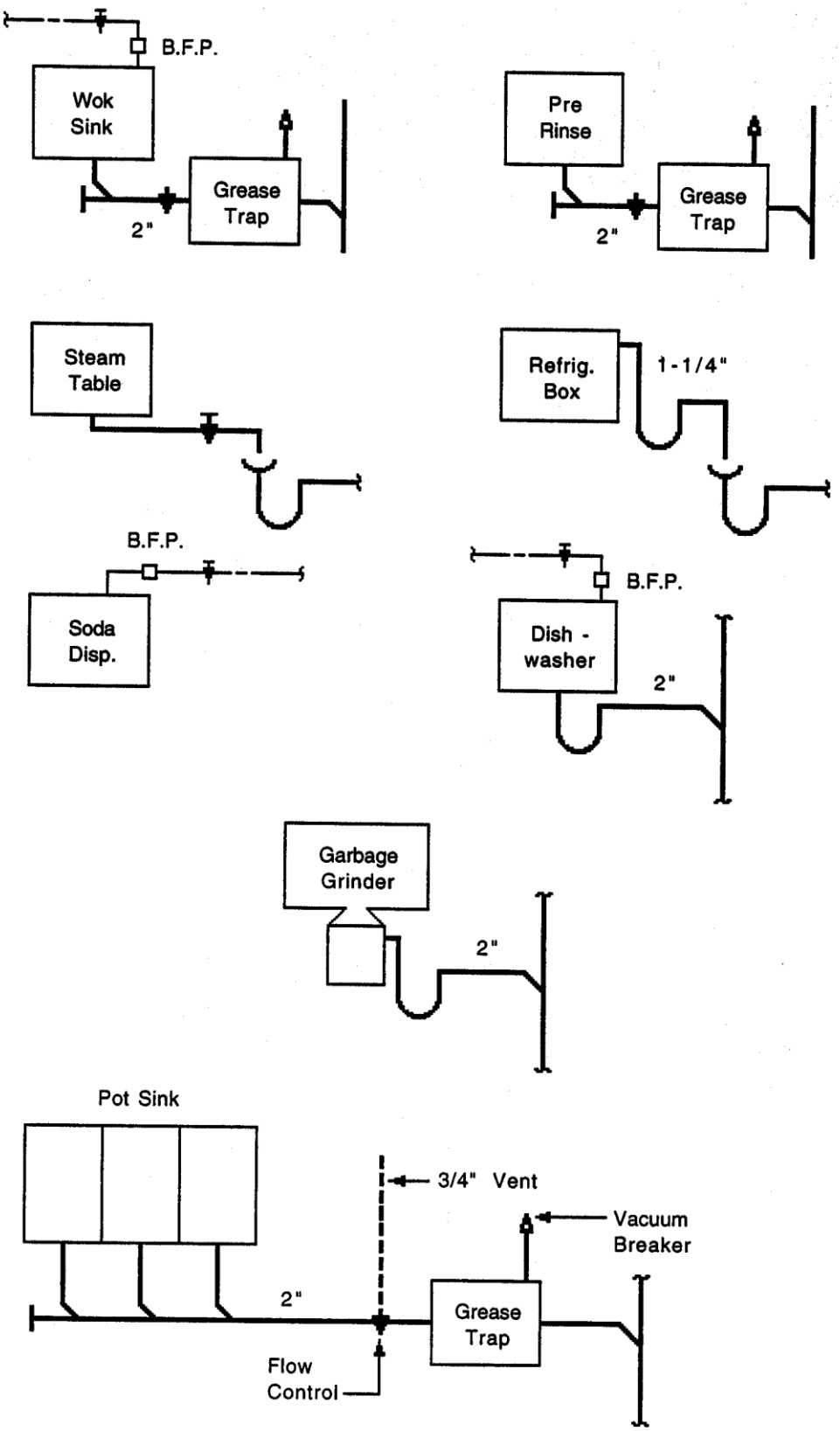

SECTION P-905 SUMPS AND RECEIVING TANKS

P-905.1 Ejector and receiving tanks. All building drains carrying sewage or other sanitary waste which cannot discharge to the house drain by gravity shall discharge into a tight receiving tank, so located as to receive the wastes by gravity. The wastes shall be lifted and discharged into the house drain by duplex pumps for the sewage handled. Such receiving tanks shall be discharged automatically.

> **Exception**: In one- and two-family dwellings, fixture wastes located on a level below grade are permitted to be pumped into the house drain.

P-905.2 Venting. The drainage piping discharging into the tight tank receiving sewage or other sanitary waste shall be vented as provided in Chapter 11.

P-905.3 Air Pressure. When sewage is lifted into the house drain by air pressure, the air delivered from the compressed air tank shall be not less than the cubic foot capacity of the receiving tank, and the minimum pressure of the air delivered shall be one pound for each foot of height the sewage is to be lifted. The receiving tank shall be tested for 50 psi.

P-905.4 Access. Pumps, ejector, air compressors and air tanks shall be located so as to be readily accessible.

P-905.5 Connection to house drain. The discharge of the pump or ejector shall be connected directly to the house drain through a suitable wye fitting in front of the vent and shall be equipped with a suitable check valve and gate valve; the discharge pipe shall be vented when over 12 feet from a vented line, as provided in Chapter 11. A fresh air inlet shall be installed as prescribed in Section P-1106.0.

Figure P-905.5

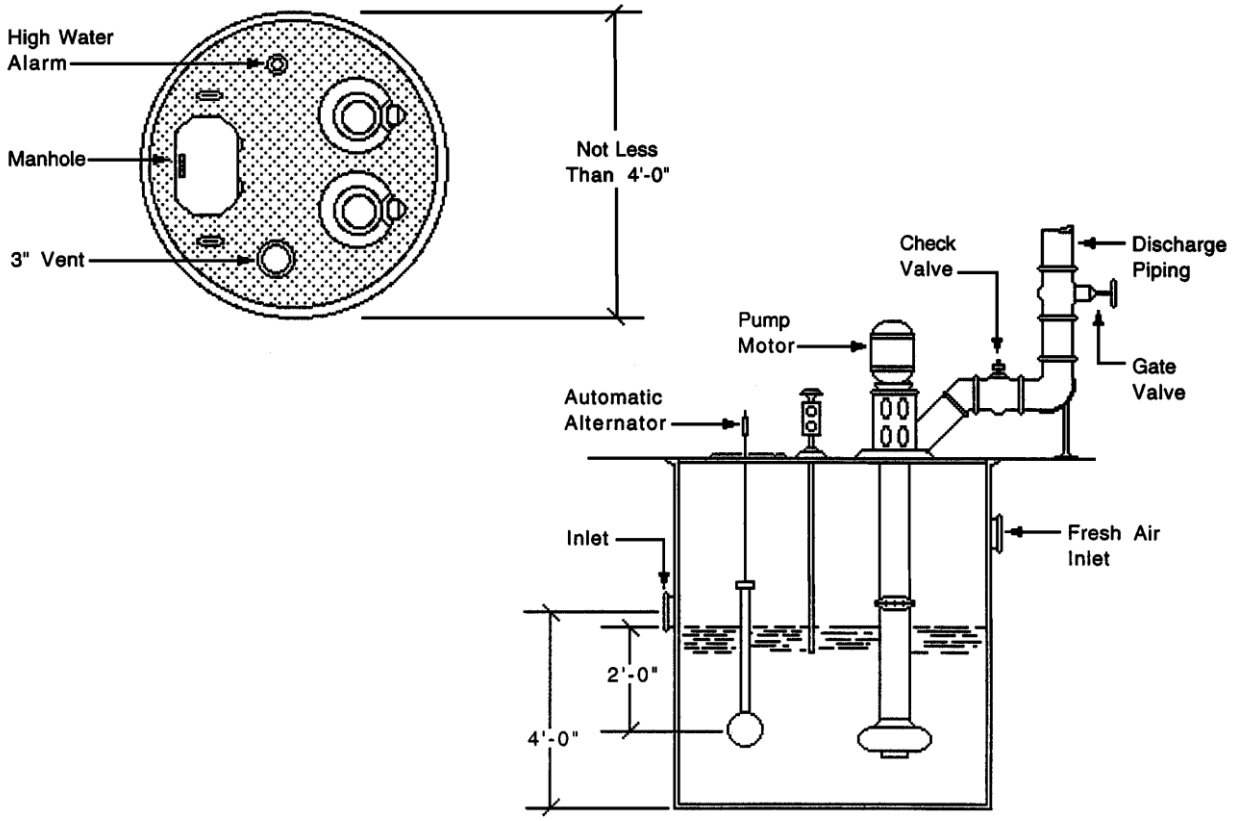

SEWAGE EJECTOR DETAIL

P-905.6 Pumping. With approval of the Department, small fixture wastes which cannot discharge to the house drain by gravity shall be pumped to the house drain in front of the vent without the use of a sump or receiving tank. The discharge line shall be equipped with a check valve and gate valve installed on the pipe discharging into a wye fitting on the house drain.

SECTION P-906 CONDENSATE AND BLOWOFF CONNECTIONS

P-906.1 Steam discharge. Steam exhaust from pressing machines, steam boiler blowoffs, or steam condensate drips shall not discharge directly to the atmosphere nor be connected directly to the house drainage system.

P-906.1.1 Cooling. Cooling methods shall be provided which automatically cool the exhaust to 140° F or less, if the waste is discharged to the house drainage system. If potable water is used with a direct connection to the cooling apparatus, a safe waste connection shall be used.

P-906.2 Tank size. If a condensate or blowoff tank is used, the tank shall be sized to a capacity of 1/3 the total water capacity of the vessel or vessels discharging into the tank.

P-906.2.1 Tank venting. The tank shall be vented through the roof with galvanized wrought iron, galvanized yoloy, or copper vent pipe not less than two inches in size.

P-906.2.2 Tank overflow. The overflow shall discharge into the house drain in accordance with P-906.1.1. The overflow pipe shall be submerged inside the tank.

SECTION P-907 HYDRAULICALLY OPERATED EQUIPMENT

P-907.1 Relief, An approved relief or surge tank shall be installed in connection with all equipment, such as hydraulic elevators or lifts operated by water pressure. Such relief or surge tanks shall be arranged and connected so that the pressure of discharge therefrom shall at no time exceed 5 psi in the building drainage system.

P-907.2 Relief discharge. The discharge connection from relief or surge tanks shall be connected and arranged so as to provide a trapped water seal not less than 12 inches in depth within the relief or surge tank. Where there is danger of backflow or back pressure, effective measures shall be taken to prevent backflow in accordance with the requirements of this code.

CHAPTER 10
STORM WATER DRAINAGE PIPING

SECTION P-1001 GENERAL REQUIREMENTS

P-1001.1 Impervious area drainage. All roofs exceeding 300 square feet, all paved areas exceeding 5000 square feet, all paved courts and all paved open shafts shall be drained to an approved point of disposal, except that for one- and two-family dwellings, and where approved, storm water is permitted to discharge onto flat areas such as lawns, provided that the storm water flows away from the building. All paved areas in excess of 5000 square feet and all open shafts shall be drained into a public storm-sewer system, an approved storm water management system or a public combined sewer system, to a point of disposal approved by the Department so as to:

1. Protect the foundation of buildings from water damage;
2. Prevent water accumulation on streets, sidewalks and other areas used for pedestrian or vehicular travel;
3. Prevent water accumulation which may cause odors, the breeding of insects, or other health hazards;
4. Prevent contamination of water supply systems.

P-1001.2 Area drains. Area drains may be required by the Department in order to comply with Section P-1001.1.

P-1001.3 Premises drains. Each lot shall be provided with area drains as required in Section P-715.

P-1001.4 Rainwater conductors. Rainwater conductors connected with the storm water upright of an area drain shall be permitted, provided that the area drain does not receive the discharge from waste pipes.

P-1001.5 Traps. Leaders, yard drains, and other storm drains connected to a combined sewer shall be effectively trapped, except that inside leaders connected to roof outlets are permitted without traps if they are not located directly below a door or window or other ventilating opening of the same or an adjacent building nor within 12 feet of such an opening.

P-1001.6 Conversion. Where an owner is required to abandon an individual sewage disposal system and connect to an available public sewer, the rain leaders of detached accessory buildings exceeding 300 square feet located on the same lot shall be permitted to discharge to a point of disposal other than the public sewer upon request by the property owner. In such case, there shall be an inspection and approval by the Department to determine that no nuisance or unsanitary conditions will be created.

P-1001.7 Catch basins. Construction of storm water catch basins shall be one of the following:

1. Reinforced concrete with the base and walls not less than 6 inches in thickness; or
2. 8-inch sewer brick, parged to a smooth finish on the interior wall; or
3. 8-inch 75% solid concrete block, parged to a smooth finish on the interior walls; or
4. Other materials as approved by the Department.

Figure P-1001.7

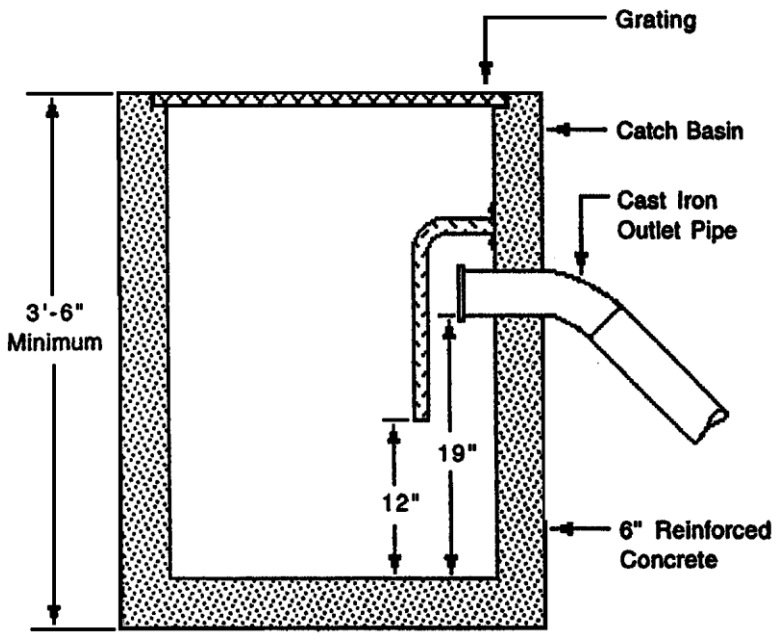

STORM WATER CATCH BASIN DETAIL

SECTION P-1002 EXPANSION JOINTS

P-1002.1 Required. Expansion joints or sleeves shall be necessary because of temperature variation or physical condition.

SECTION P-1003 SUBSOIL DRAINS

P-1003.1 Interceptor required. Subsoil drains connected to street sewers or house drains shall discharge into and through a properly trapped sand interceptor.

P-1003.2 Discharge. Where subsoil drains are located below the sewer level, they shall be in accordance with Section P-1003.1. The storm water shall be raised and discharged in the house drain by an automatically operated sump pump.

P-1003.3 Dwellings. In a single-family dwelling, the subsurface water shall drain directly into an open sump or be raised by means of an automatically operated sump pump, which discharges into an area drain, floor drain, or laundry tray.

P-1003.4 Materials. Subsoil drains shall be open-jointed, horizontally split or perforated pipe conforming to one of the standards listed in Table 1003.4.

TABLE P-1003.4 — SUBSOIL DRAIN PIPE MATERIALS

MATERIAL	STANDARD
Asbestos-cement pipe	ASTM C 508
Cast-iron pipe	ASTM A 74; ASTM A 888; CISPI 301
Polyethylene (PE) plastic pipe	ASTM F 405; CAN/CSA B182.1; CSA B182.6; CSA B182.8
Polyvinyl chloride (PVC) Plastic pipe (type sewer pipe, PS25, PS50 or PS100)	ASTM D 2729; ASTM F 891; CSA B182.2; CAN/CSA B182.4
Stainless steel drainage systems, Type 316L	ASME A 112.3.1
Vitrified clay pipe	ASTM C 4; ASTM C 700

SECTION P-1004 PROHIBITED DRAINAGE

P-1004.1 Separation. Storm water shall not be drained into sewers that are intended only for sanitary sewage. Sanitary waste shall not be drained into sewers that are intended only for storm water.

P-1004.2 Stack limitation. No soil stack, or vent stack shall also serve as a leader. No leader shall also serve as a soil stack, waste stack, or vent stack.

SECTION P-1005 MATERIALS

P-1005.1 Inside storm drainage conductors. Inside storm drainage conductors installed above ground shall conform to one of the standards listed in Table P-902.1.

P-1005.2 Outside leaders and downspouts. Outside leaders and downspouts shall be connected to the house drain which shall be cast iron pipe extending vertically at least 18 inches above the grade level with tight connection between leader and soil pipe.

P-1005.3 Underground storm drains. Underground building storm drain pipe within a building and beyond the building wall to the street, including site work shall conform to one of the materials and standards listed in Table P-902.2. These materials shall be installed with approved fittings in compliance with Section P-305.

P-1005.4 House storm drains. House storm drains underground beyond the building wall shall be installed in accordance with Section P-902.3. These materials shall be installed with appropriate fittings in compliance with standards in Section P-305.

P-1005.4.1 Unstable soil. When installed in filled or unstable ground, the house storm drain shall be of cast iron or hard temper copper of a weight not less than type “L”.

P-1005.5 Plastic pipe. ABS plastic and PVC plastic pipe and fittings authorized by Sections P-1005.1 and P-1005.3 shall be installed in accordance with Section P-305.0 and shall be limited to use only in connection with the following buildings:

1. Residential buildings containing no more than four families and not exceeding three stories in height. For the purpose of this section, basements are not considered a story.

P-1005.6 Clearance from buildings. All underground storm water piping installed parallel to a foundation wall shall be at least 3 feet from the building foundation wall when the depth does not exceed 4 feet. One-foot of additional distance from the foundation wall shall be required for each addition one-foot depth below 4 feet.

SECTION P-1006 SIZE OF LEADERS AND STORM DRAINS

P-1006.1 Vertical leaders. The minimum size of a vertical leader, including the horizontal offset at the top of the vertical leader draining a roof, shall be based on the horizontal roof area served by such leader, as provided in Table P-1006.1.

TABLE P-1006.1 — MAXIMUM HORIZONTAL PROJECTED ROOF AREA IN SQUARE FEET FOR BUILDING STORM DRAINS AT VARIOUS SLOPES

Diameter (Inches)	Fall Per Foot			Vertical Leaders
	1/8”	1/4”	1/2”	
3		930	1,300	1,750
4	1,585	2,100	3,300	3,650
5	2,875	3,800	5,300	6,000
6	4,300	6,000	9,000	10,800
8	9,200	13,000	18,000	23,000
10	16,500	25,000	35,000	40,000
12	26,600	40,000	60,000	65,000
15	47,500	75,000	100,000	115,000
16	57,250	92,500	131,000	
18	67,000	110,000	162,000	
20	85,500	135,000	196,000	
24	155,000	225,000		
30	295,000	416,000		

Note: Seeded areas shall be calculated as 55% of the actual measured area.

P-1006.1.1 Equivalent area. Where there is a continuous or semi-continuous discharge into the house storm drain, as from a bilge pump, ejector, air conditioning equipment, or similar device, each gallon per minute of such discharge shall be assumed to be equivalent to 14 square feet of roof area.

P-1006.2 Storm drains. The minimum size of the house storm drain or any of its branches that drain a roof or area drain shall be determined according to Table P-1006.1. The main drain shall be graded at a fall of not less than 1/8 inch per foot, except by approval of the Department.

P-1006.3 Canopies and marquees. Canopies, marquees, and similar extended roof surfaces shall be drained by minimum two-inch leaders where construction does not permit the installation of larger pipe with approval of the Department. A three-inch trap and underground drain shall be provided.

P-1006.4 Combined drainage piping. Where a combined main sewer is utilized, the house drain and house storm drain shall be connected to a combined house drain or combined sewer.

Figure P-1006.4

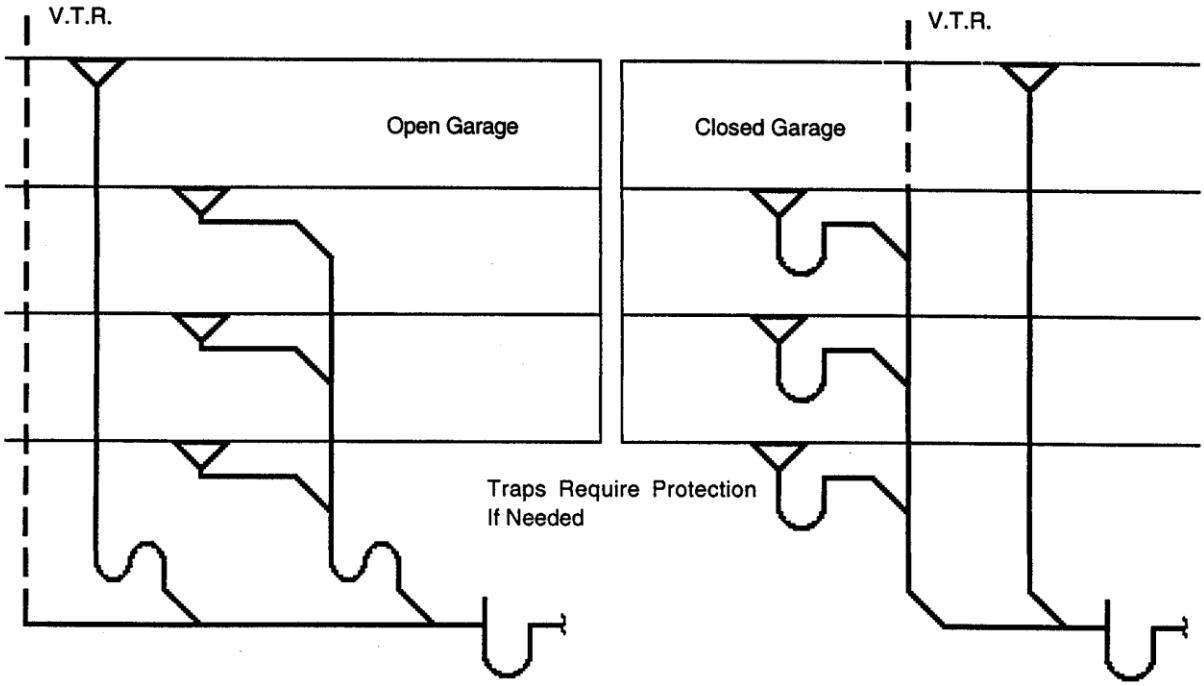

PARKING GARAGE DRAINAGE
ONE-PIPE SYSTEM

P-1006.4.1 Size. The size of the combined house drain shall be obtained from Table P-1006.1, by adding to the square feet of storm water drainage area an allowance for each fixture unit on the house drain. This allowance shall be in square feet, as determined in accordance with Table P-1006.4.

TABLE P-1006.4 — ALLOWANCE IN SQUARE FEET OF PITCHED ROOFS FOR FIXTURE UNITS

Square Feet	Fixture Units
7 for each of the first	1,500
5 for each of the next	1,500
4 for each of the next	2,000
3 for each unit thereafter	

[THIS PAGE IS INTENTIONALLY BLANK]

CHAPTER 11
VENTS AND VENTING

SECTION P-1101 VENTING

P-1101.1 Required. All fixtures shall be adequately vented to prevent syphonic action and to protect trap seals.

Figure P-1101.0

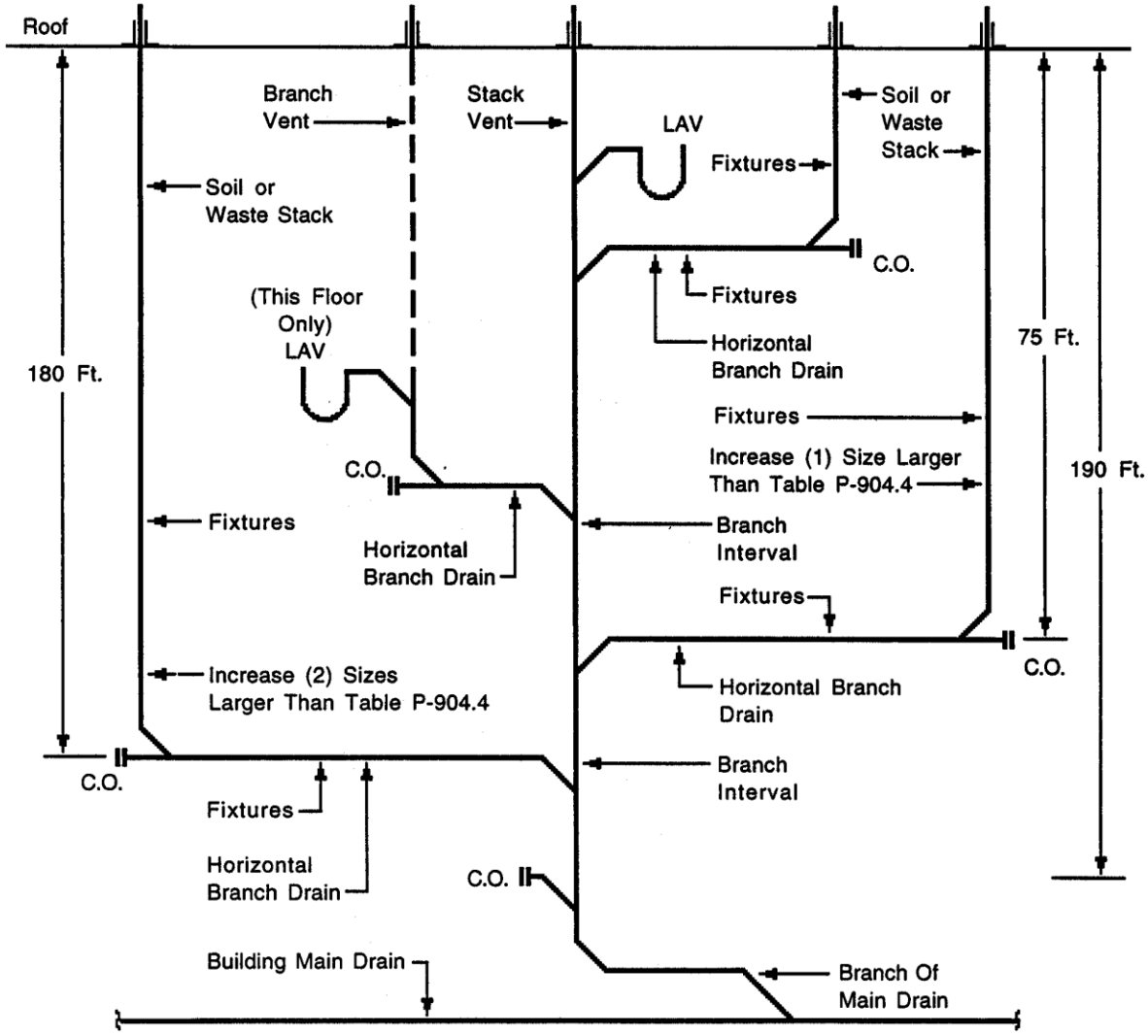

*** Refer to Chapter 9 For Sizing Soil and Waste Stacks**

PHILADELPHIA SINGLE STACK SYSTEM and HORIZONTAL BRANCH DRAINS VENTED BY BRANCH VENTS OR SOIL and WASTE STACKS

Figure P-1101.0a

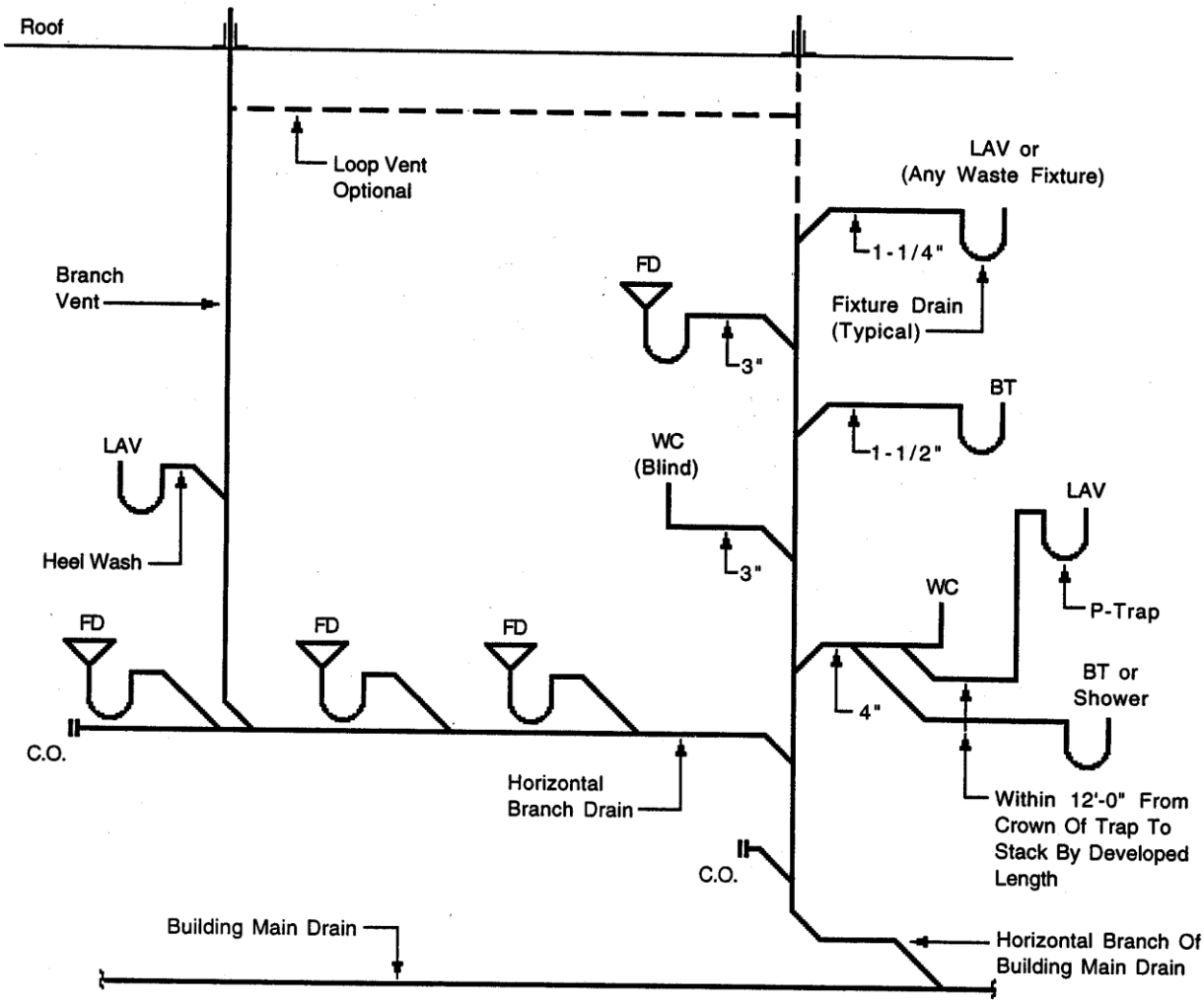

*** Refer To Chapter 9 For Sizing Soil and Waste Stacks**

PHILADELPHIA SOIL OR WASTE STACK SYSTEM and HORIZONTAL BRANCH DRAIN and BRANCH VENT

SECTION P-1102 MATERIALS

P-1102.1 Above-ground venting. Vent pipes shall be cast iron (hub or hubless), galvanized malleable iron split couplings (victaulic), type DWV copper tubing or heavier, brass, stainless steel (409 type "G" copper-coated), ABS plastic pipe or PVC plastic pipe. The pipe and fittings for each type of pipe including malleable fittings, shall comply with the applicable specifications listed in Section P-305.

P-1102.1.1 Corrosion resistance. Vent pipe exposed to fumes from waste piping carrying corrosive industrial wastes shall be acid-resisting cast iron, chemical porcelain, heat resistant pre-stressed borosilicate glass, polyethylene or polypropylene.

P-1102.1.2 Fittings. Fittings on ferrous pipe shall be of cast iron or malleable iron. Drainage type fittings shall be required only where vent lines connect to drainage lines.

P-1102.2 Underground venting. Underground vent pipe shall be of cast iron or copper tube of a weight not less than type "L" hard temper. All underground vent piping installed parallel to a foundation wall shall be at least 3 feet from the building foundation wall when the depth does not exceed 4 feet. One foot of additional distance from the foundation wall shall be required for each additional one-foot depth below 4 feet.

P-1102.2.1 Fittings. Fittings shall conform to Section P-1102.1.2.

P-1102.3 Plastic pipes. Vent pipes of ABS plastic and PVC plastic shall be limited to installations of buildings containing dwelling units only. Such buildings shall consist of from one to four families and shall not exceed three stories in height. For the purpose of this section, basements are not considered a story height.

P-1102.3.1 Joints. PVC joints shall be solvent weld.

SECTION P-1103 PROTECTION OF TRAP SEALS

P-1103.1 Connection. The seal of every fixture trap in a plumbing system shall be protected by being individually connected to a properly vented drain.

Exception: Leader traps, area drain traps, and yard drain traps.

P-1103.2 Stack vents. Every soil or waste stack shall be extended vertically, full size, as a stack vent to open air.

P-1103.3 Vent stacks. A vent stack or main vent shall be installed with a soil or waste stack when relief vents or other branch vents are required in more than five branch intervals. The vent stack shall terminate independently in the open air above the roof or shall be connected with the stack vent at least 6 inches above the flood level rim of the highest fixture and shall connect with the soil or waste stack through, at, or below the lowest horizontal soil or waste branch, or with the house drain, in such manner as to prevent the accumulation of rust scale. When water closets are installed on this lowest horizontal branch, they shall be connected to the side of the horizontal branch.

P-1103.3.1 Vent required. Every building in which plumbing is installed shall have at least one stack vent or vent stack which shall run undiminished in size and as directly as possible from the building drainage system through to the open air above the roof and in accordance with Section P-1103.4. The minimum size of the stack vent or vent stack shall be 3 inches.

P-1103.4 Location of vent terminals. No vent terminal from a sanitary drainage system shall be directly beneath any door, window or other ventilating opening of the same or adjacent building, nor shall any such vent terminal be within 12 feet horizontally of such an opening unless it is at least 3 feet above the top of such opening.

P-1103.4.1 Above roof. Extensions of vent pipes through a roof shall be terminated at least 2 feet above the roof surface and shall be properly flashed. Where the roof is used for any purpose other than weather protection, the vent pipe shall extend at least 7 feet above the roof surface and shall be properly supported.

SECTION P-1104 VELOCITY BREAKS IN BUILDINGS OVER 30 STORIES

P-1104.1 Required. Velocity breaks shall be required in soil stacks in buildings more than 30 stories above grade to impede the velocity of the waste. At each velocity break, the stack shall be offset by two 45-degree breaks. A relief vent one-half the size of the soil stack shall be installed at the top of the second 45-degree break and shall be connected to the nearest vent stack.

P-1104.2 Intervals. Velocity breaks shall be installed at maximum 10-story intervals above the 30th floor.

P-1104.3 Relief vent. A relief vent pipe shall be installed on the main drain before the main house trap inside the building and be connected to the nearest vent line for any building 75 feet or higher. On main drains of 8 inches or less, the vent shall be a minimum of 4 inches. On main drains 10 inches and over, the relief vent shall be a minimum of 5 inches.

Figure P-1104.0

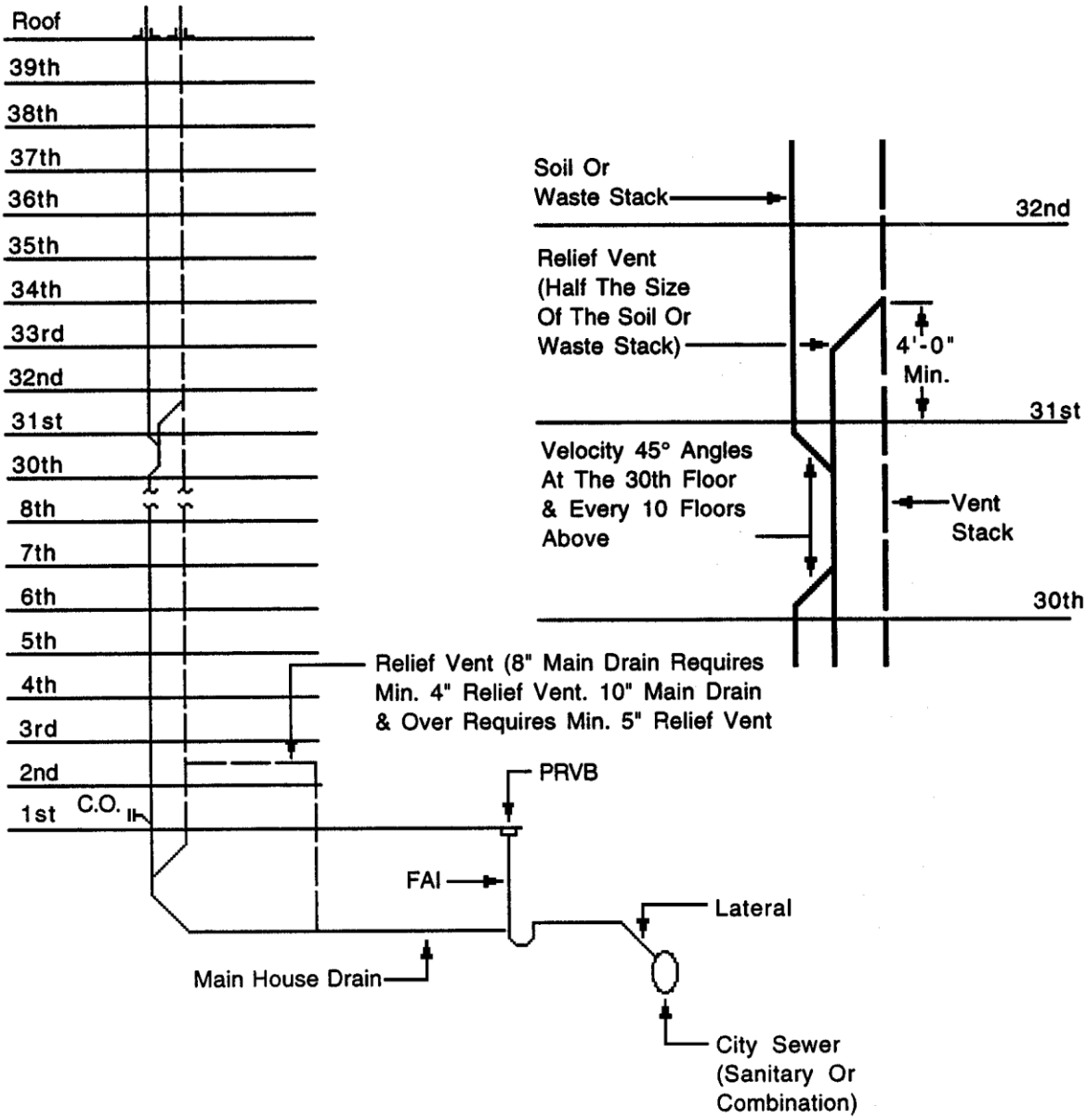

VELOCITY BREAKS IN BUILDINGS OVER 30 STORIES

SECTION P-1105 VENTILATION OF BRANCH OR HORIZONTAL PIPES

P-1105.1 Vent required. Every branch, horizontal soil pipe, or waste pipe to which a group of two or more fixtures is to be connected shall have a vent of the same size as the branch by: extending the branch full size as required in Section P-1103.4; connecting to the stack vent 6 inches above the highest fixture; or connecting to the vent stack 6 inches above the highest fixture connected to the branch. The horizontal branch from the base of a stack shall be connected to the house drain as prescribed in Section P-904.4. Table P-904.4 is not subject to these requirements.

Figure P-1105.1

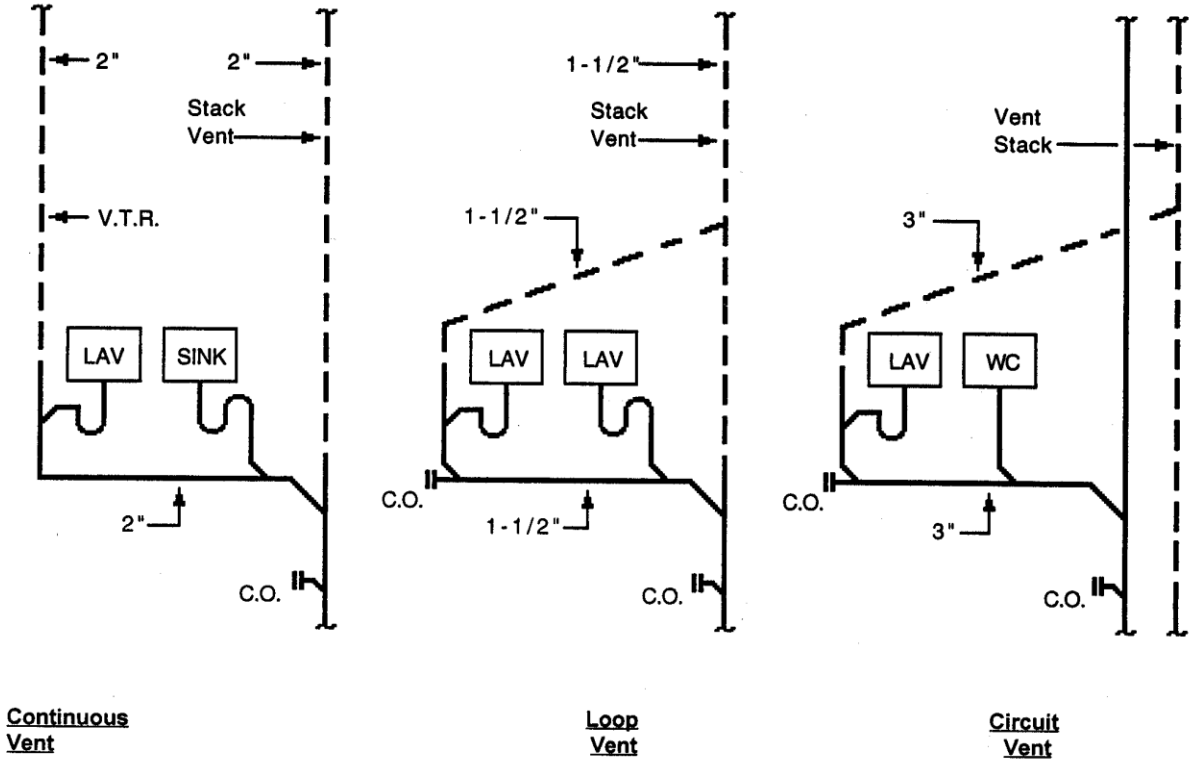

P-1105.1.1 Alternatives. Where the center of a water closet outlet is not more than 48 inches in developed length from the center of 4-inch vented soil pipe on a vertical line, or through a wye or wye and 1/8 bend on a vented horizontal line, connection of small fixture wastes - not exceeding two that are 1-1/2 inches or less in diameter - to the side of an ideal bend (closet bend) above the center line without an additional vent, or by using no-hub, copper, ABS or PVC pipe and fittings in accordance with Section P-902.0, shall be approved by the Department. Where the center of a water closet outlet is not more than 18 inches from the center of a 3-inch vented soil pipe and the 4-inch ideal bend (closet bend) is connected directly to a sanitary tee on a vertical line, connection of small fixture wastes - not exceeding two that are 1-1/2 inches or less in diameter – to the sides of the bend above the center line without an additional vent and in accordance with Section P-904.5 shall be approved. As an alternative to increasing the size of a stack from 3 inches to 4 inches, a merion fitting shall be used to receive the discharge of a water closet and small fixture wastes.

Figure P-1105.1.1

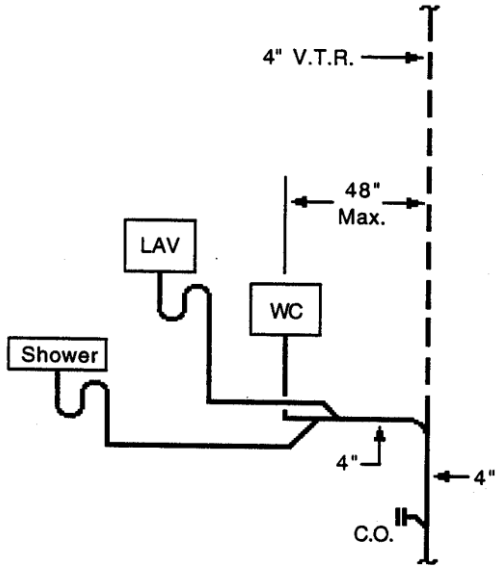

WATER CLOSET WITHIN 48" OF EXISTING STACK

Figure P-1105.1.1a

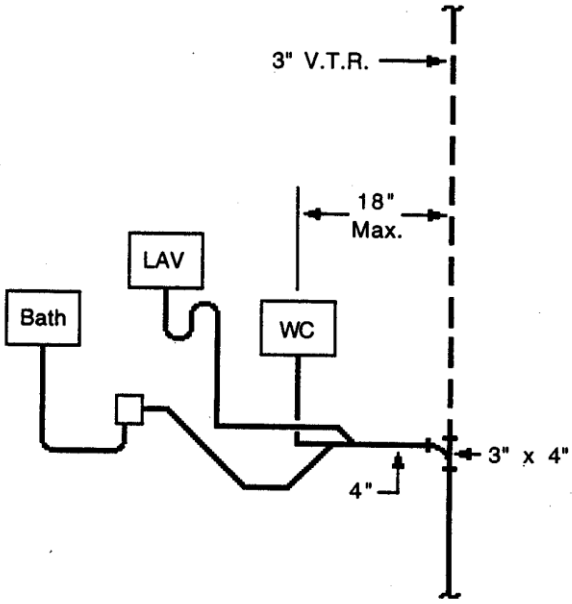

BATHROOM GROUP W/ IDEAL BEND

Figure P-1105.1.1b

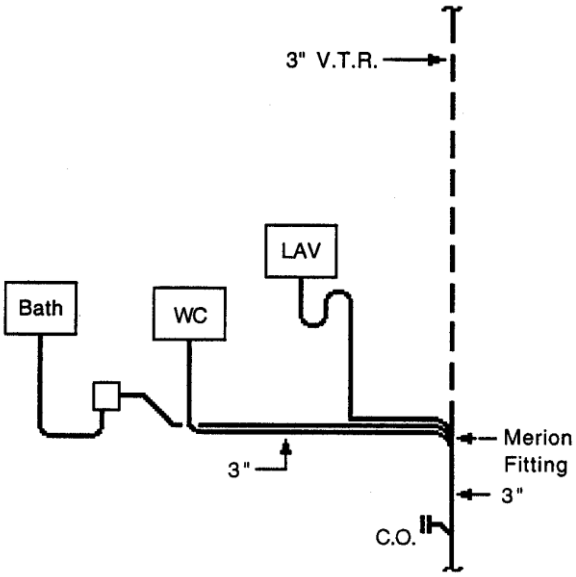

BATHROOM GROUP W/ MERION FITTING

P-1105.1.1.1 Merion fittings. The water closet soil line connected to a merion fitting shall be a maximum of 8 feet developed length. The ideal bend (closet bend) shall not be less than 4 inches nominal diameter when receiving the discharge of small fixture wastes. When using 3-inch ideal bends (closet bend) to receive discharges of water closets, this fitting shall be a blind bend containing no drainage connections for other fixtures.

P-1105.1.2 Additional vent. On existing stacks in buildings where the center of a water closet outlet is more than 4 feet but not more than 8 feet from the center of a vented soil pipe, an additional 1-1/2 inch vent will be permitted if the vent is not longer than 30 feet, provided the conditions are the same as in Section P-1105.1.1.

Figure P-1105.1.2

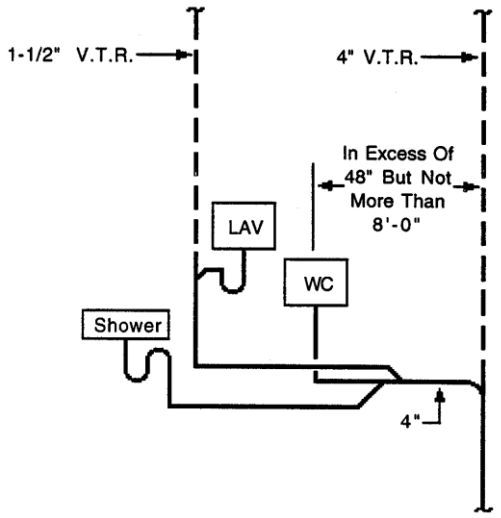

WATER CLOSET IN EXCESS OF 48" OF EXISTING STACK

P-1105.2 Minimum vent size. Any single water closet or pedestal urinal branch more than 8 feet in length or any single waste branch for fixtures other than water closets or pedestal urinals more than 12 feet in length shall have a vent sized at least one-half the diameter of the branch pipe. Depending on its length, the number of fixture units connected shall be in accordance with Table P-1110.4.

Figure P-1105.2

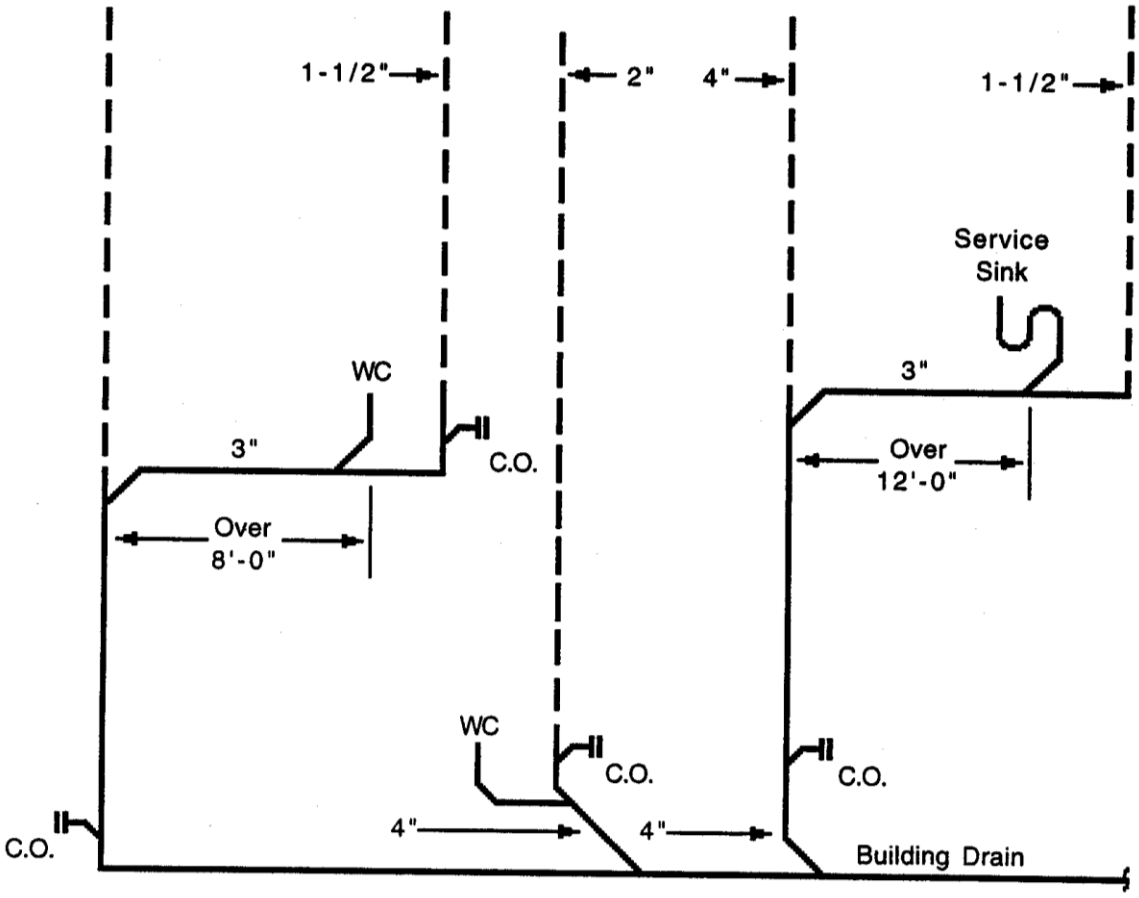

SINGLE WASTE BRANCHES IN EXCESS OF 8' - 0" and 12'-0" VENTING REQUIREMENTS

Figure P-1105.2a

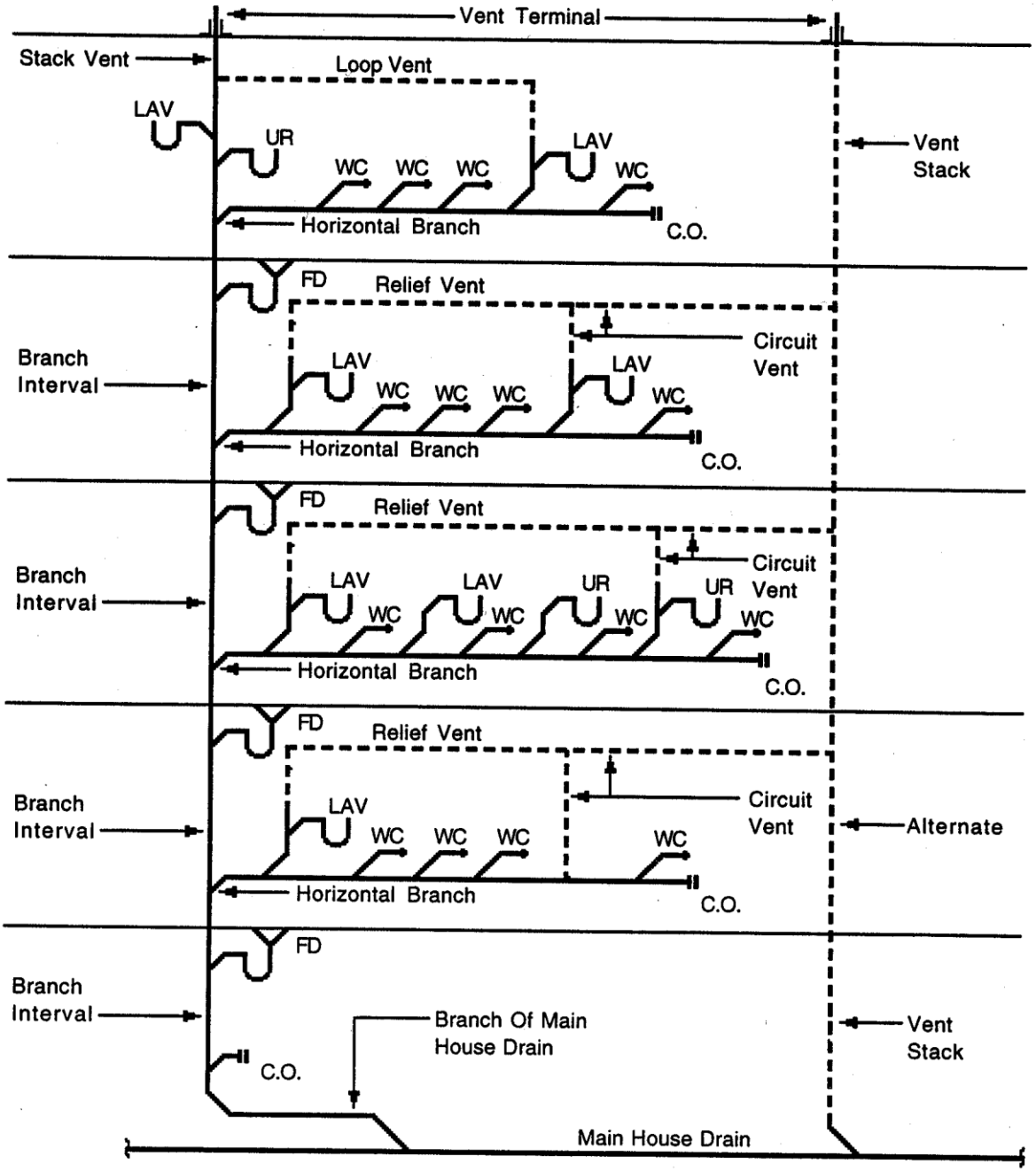

* Refer to Chapters 9 and 11 For Sizing

CIRCUIT and LOOP VENTING FOR WALL HUNG WATER CLOSETS and SMALL FIXTURES

Figure P-1105.2b

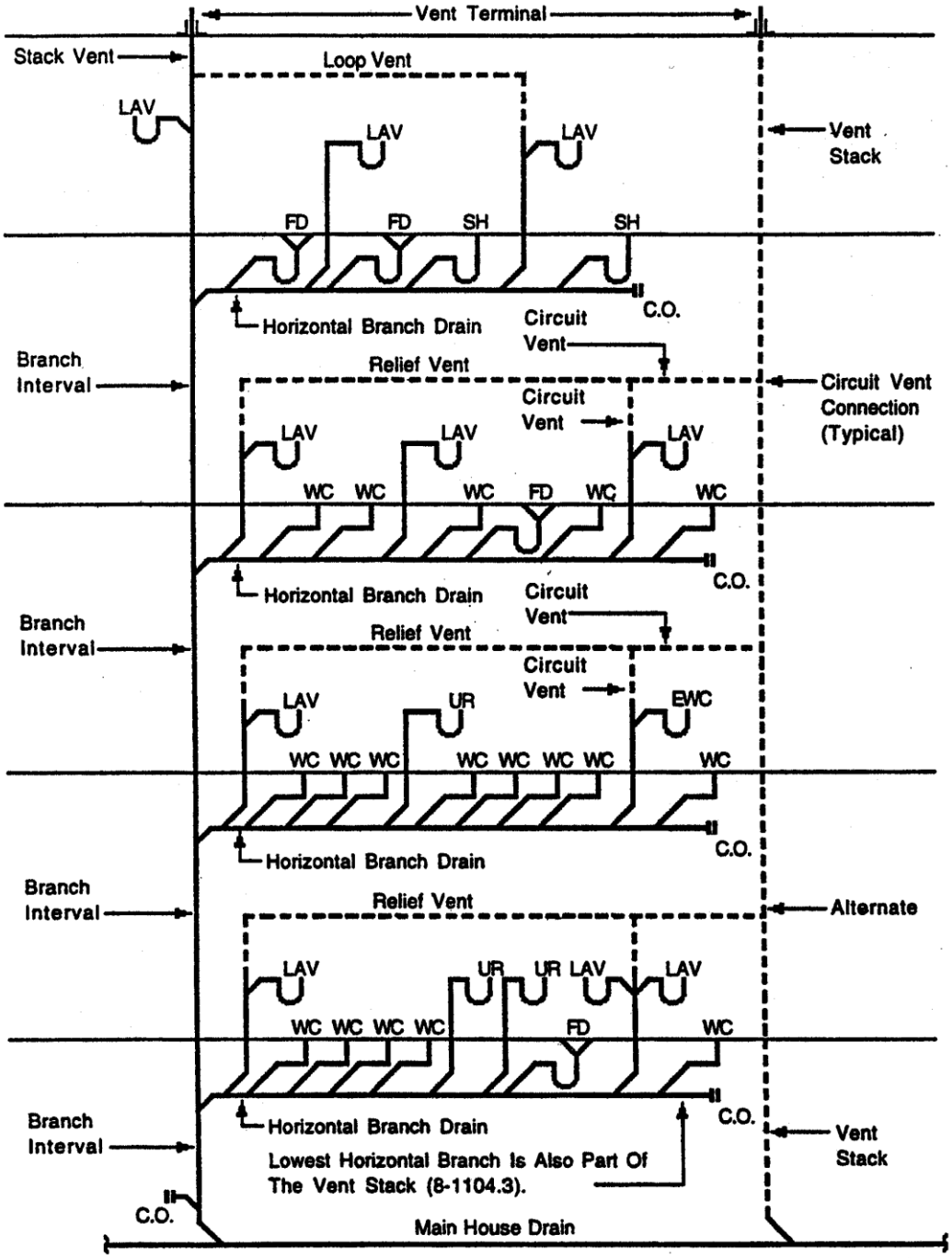

* Refer to Chapters 9 and 11 For Sizing

CIRCUIT and LOOP VENTING FOR FLOOR MOUNTED WATER CLOSETS and SMALL FIXTURES ABOVE

SECTION P-1106 EJECTOR FRESH AIR INLETS AND VENTS

P-1106.1 Fresh air inlet required. All ejectors, except pneumatic ejectors or receiving tanks used for receiving sewage or other sanitary waste, shall be provided with a fresh air inlet. The size of the fresh air inlet shall be 4 inches for 4-inch, 5-inch, and 6-inch drain pipe and 6 inches for 8-inch drains discharging into the ejector.

P-1106.2 Pneumatic ejectors. Pneumatic ejectors shall have a fresh air inlet on the inlet piping on the house side of the inlet valves.

P-1106.3 Sumps. All sumps receiving the discharge from fixtures other than water closets shall be provided with a fresh air inlet pipe. The size of the fresh air inlet shall not be less than two inches, and the locations of the fresh air inlet piping shall be in accordance with Section P-503. The drainage piping discharging into the sump shall be vented as provided in Chapter 11.

SECTION P-1107 VENTING OF OFFSETS

P-1107.1 Stack offsets. Offsets in soil or waste stacks at an angle greater than 45 degrees from the vertical serving fixtures above the offset shall be vented as provided in Sections P-1107.1.1 or P-1107.1.2.

P-1107.1.1 Yoke venting offsets. Such offsets shall be provided with a yoke vent equal to one-half the diameter of the vent stack or soil stack but not less than 1-1/2 inches. The lower end of the yoke vent shall connect to the soil or waste stack through a wye below the offset and above the next lower horizontal branch, and the upper end shall connect to the stack vent or the vent stack not less than 6 inches above the highest fixture.

Figure P-1107.1.1

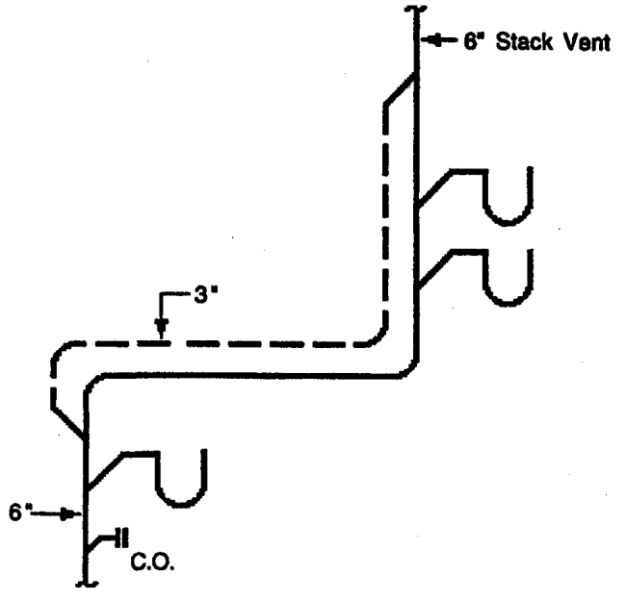

YOKE VENTING OFFSETS

P-1107.1.2 Separate Venting. Such offsets shall be vented as two separate soil or waste stacks, with the stack section below the offset and the stack section above the offset.

Figure P-1107.1.2

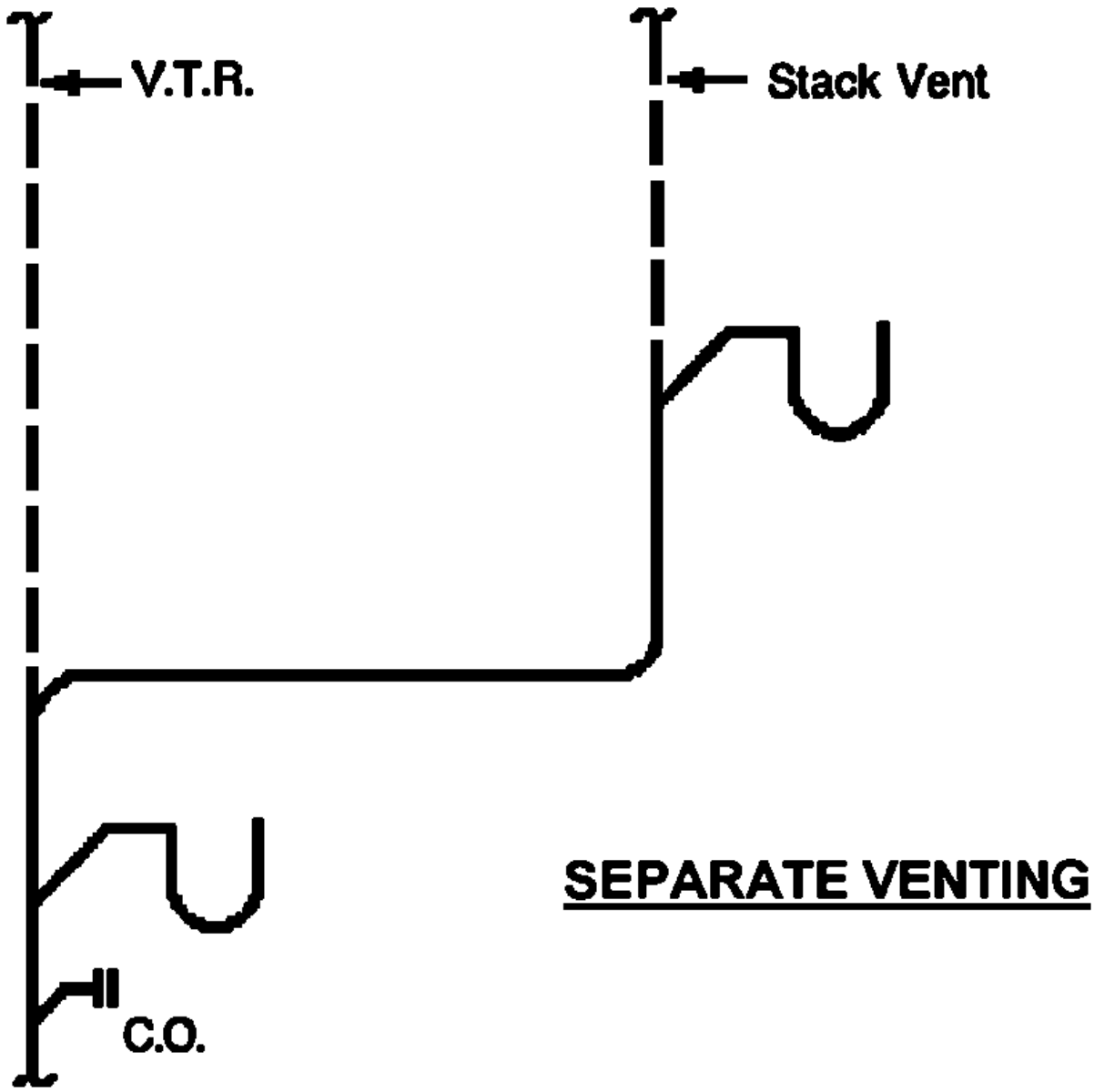

P-1107.2 Venting not required. All buildings of not more than three stories having a soil or waste stack with one offset at an angle greater than 45 degrees from the vertical and which does not exceed 10 feet in length shall not require additional venting. No fixtures shall be permitted above the offset, except that one small fixture may be installed for a heel wash.

Figure P-1107.2

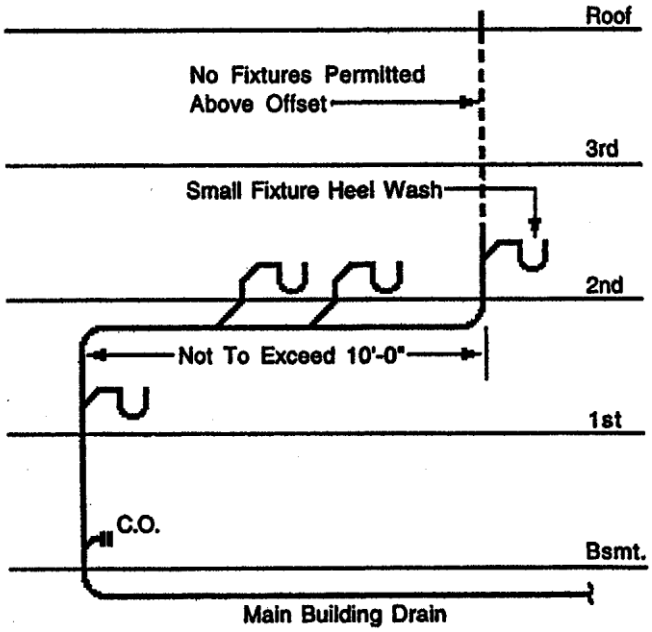

OFFSET OF SOIL STACK
IN BUILDINGS 3-STORIES and LESS

SECTION P-1108 VENT HEADERS

P-1108.1 Vent header permitted. Stack vents and vent stacks shall be permitted to connect into a common vent header at the top of the stacks and extend to the open air above the roof at one point. Such header shall be sized in accordance with the requirements of Table P-1110.4. As per Section P-1105, the size of the horizontal branch entering a stack shall have a vent of the same size; therefore, one of the stacks entering into a common vent header shall be of the same size as the branch entering the stack and shall maintain that size through the roof. Other sizes of the header can then be sized as per Table P-1110.4.

P-1108.2 Sizing. The number of fixture units considered in sizing the vent header shall be the sum of all fixture units on all stacks connected thereto. The developed length shall be the longest vent length from the intersection at the base of the most distant stack to the vent header terminal in the open air above the roof. The latter shall be extended to the open air above the roof as a direct extension of one stack.

Figure P-1108.0

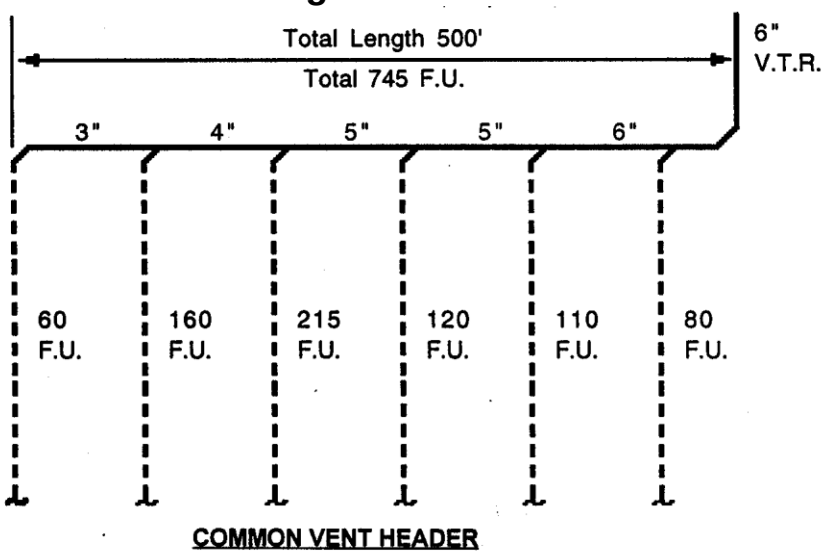

SECTION P-1109 VENT PIPE GRADES AND CONNECTIONS

P-1109.1 Grades. All vent and branch-vent pipes shall be free from drops or sags and shall be graded and connected so as to drip back to the soil or waste pipe or vent stack by gravity.

P-1109.2 Connection to vent stack. A connection between a vent pipe and a vent stack shall be at least 6 inches above the flood level rim of the highest fixture served by the vent pipe. Horizontal vent pipes forming branch vents, relief vents, circuit vents or loop vents, shall be at least 6 inches above the flood level rim of the highest fixture served.

SECTION P-1110 SIZE, LENGTH AND NUMBER OF VENTS AND FRESH AIR INLETS

P-1110.1 Length of vents. The length of a vent shall be its developed length from the lowest connection of the vent with the soil stack, waste stack, or house drain to the vent terminal above the roof.

P-1110.2 Size of stack vent. The diameter of a stack vent shall not be less than the diameter of the soil or waste stack of which it is an extension.

P-1110.3 Size of vent stacks. A vent stack or main vent connecting relief vents, circuit vents, or loop vents shall have a diameter of at least one-half the diameter of the soil or waste stack to which the vent stack or main vent is connected, but in no case less than 1-1/2 inches. The maximum number of fixture units connected to the vent stack shall be in accordance with Table P-1110.4. The vent stack or main vent shall not be less in size than the branch, circuit, or loop vent it is servicing. Where fixtures are installed on the house drain behind the line of vent, a minimum vent stack of 1-1/2 inches shall be required for small fixtures having a fixture unit value not greater than 10 and a minimum of 2 inches for one or more water closets and other fixtures, except if a larger size is required according to Table P-1110.4.

Figure P-1110.3

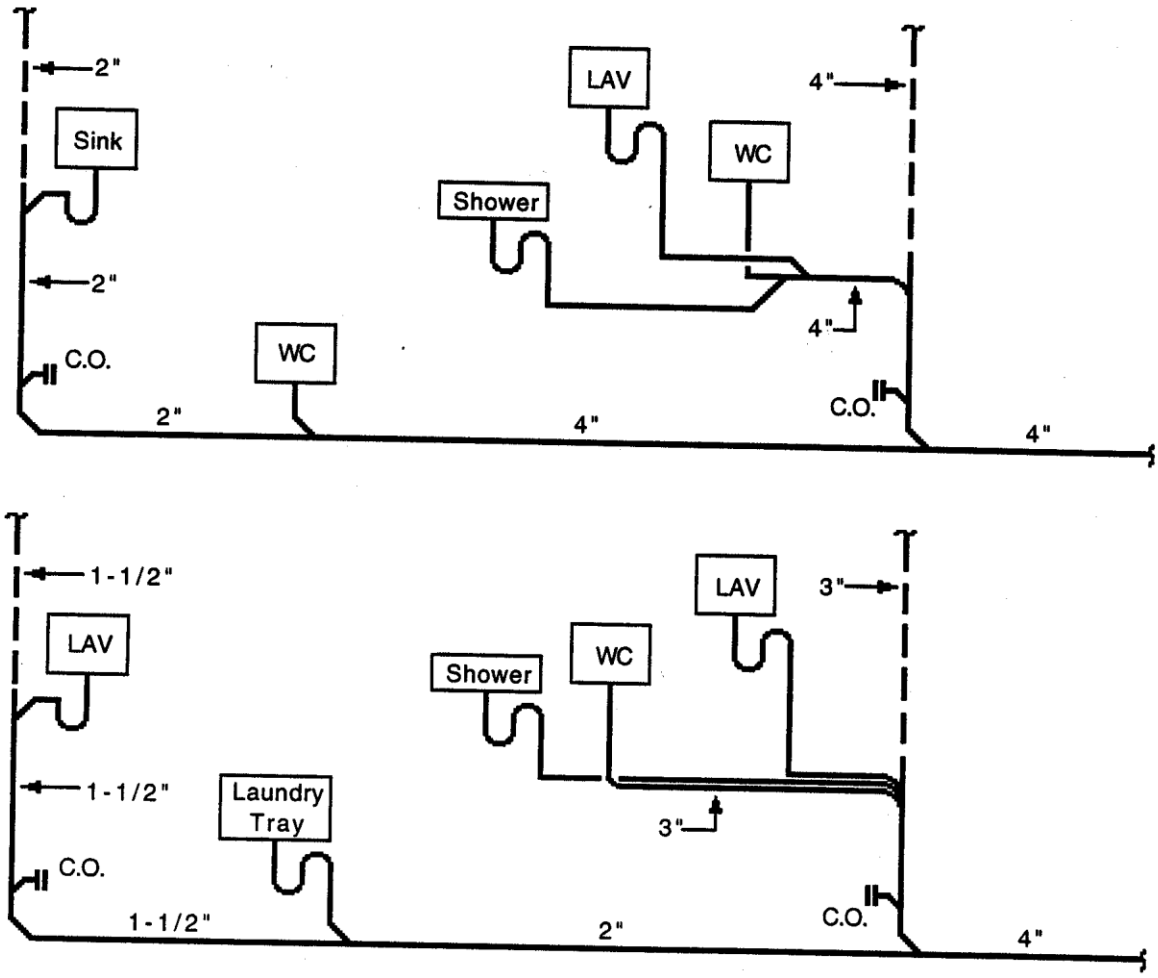

VENT STACK SIZING

P-1110.4 Size of relief vent. The diameter of a relief vent shall not be less than one-half the diameter of the horizontal branch to which it is connected, with a minimum size of 1-1/2 inches. The maximum number of fixture units connected to the relief vent shall be in accordance with Table P-1110.4.

Figure P-1110.4

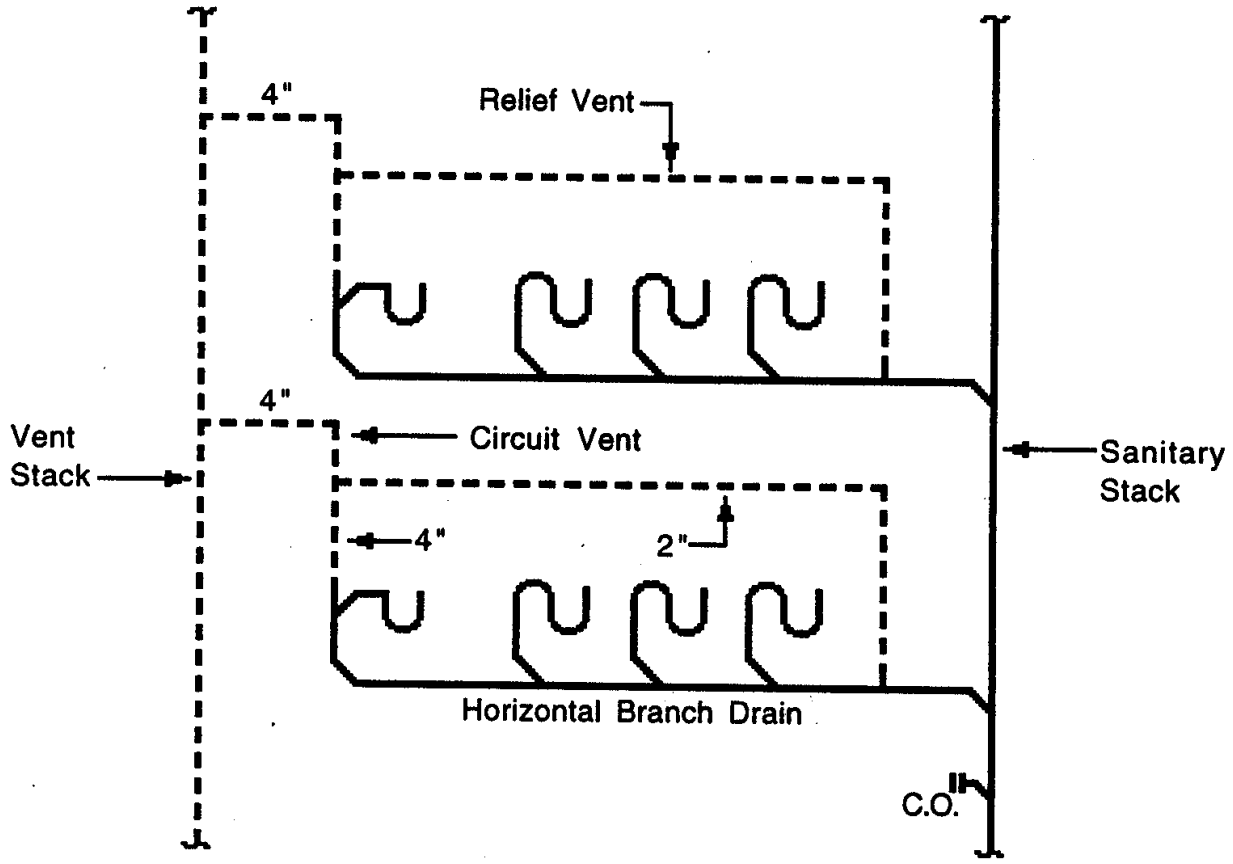

RELIEF VENT SIZING

TABLE P-1110.4 — SIZE AND LENGTH OF VENTS

Fixture Units Connected	Diameter of Vent (inches) — Maximum Length of Vent (feet)							
	1½”	2”	2½”	3”	4”	5”	6”	8”
13	75	310						
26	70	300						
47	35	140	450					
72	23	85	260	650				
98	18	75	240	600				
195		30	95	240	1000			
293		22	70	180	750			
390			28	70	320	1000		
624			20	50	240	750		
969				20	95	240	1000	
1320				18	70	180	750	
2165					30	80	350	1000
3016					25	60	250	900
3959						40	120	450
4501						30	80	350
5850						25	60	250

CHAPTER 12
INDIRECT AND SPECIAL WASTE

SECTION P-1201 REQUIRED INDIRECT WASTE

P-1201.1 Required for discharge. Indirect waste shall be required for the discharge of all waste from:

1. Any refrigerator, ice-box, steam table, bar or soda fountain, swimming pool, swimming pool scum gutter, or any receptacle, appliance, device or apparatus which is used for the storage, preparation, or processing of food or drink. In a three-compartment bar or soda fountain sink, the ice compartment shall be separately trapped and installed as an indirect waste line. The other two compartments shall be connected with a continuous waste, or individual traps and waste lines installed as indirect waste lines in accordance with this Chapter. All drip waste lines shall conform to Section P-904.5. The separation between the ice compartment and the nearest sink shall be at least 2 feet.
2. Any appliance, device, or apparatus using water as a cooling or heating medium.
3. Any sterilizer, water still or other similar appliance, device or apparatus.
4. Any water treatment device, including filters and softeners.
5. Any water-operated device.
6. Any drain, overflow or vent from a water supply system.
7. Any drain for condensate or defrosting evaporators in air conditioning systems of having inlet in the air stream of ventilating or air conditioning systems.
8. Any other device when required by the Department and the Department of Public Health for the protection of the public health.

Figure P-1201.1

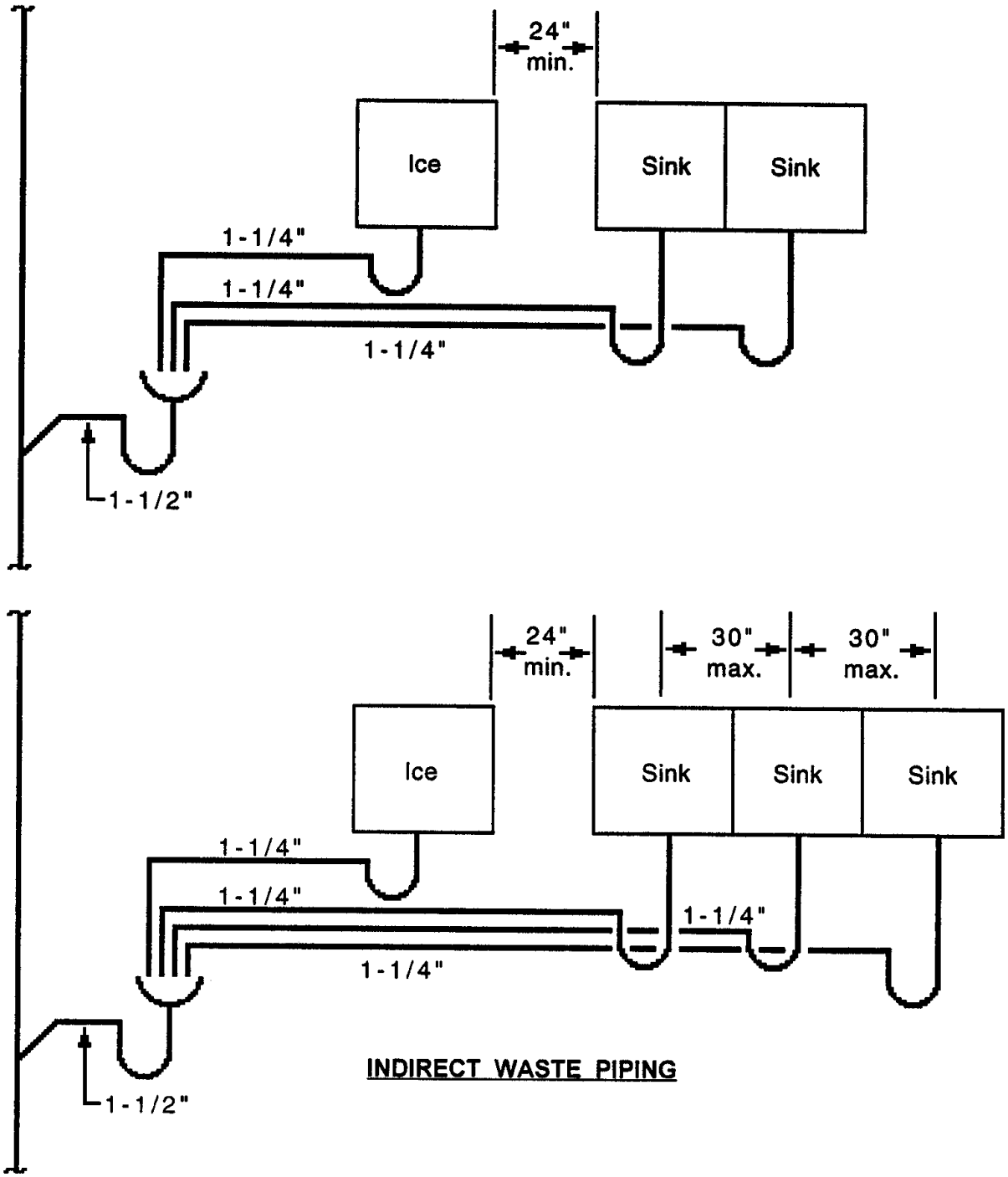

SECTION P-1202 INDIRECT WASTE PIPES

P-1202.1 Installation. Indirect waste pipes shall be installed in conformance with the provisions of this code governing sanitary-drainage piping.

P-1202.2 Discharge of indirect waste. Indirect waste pipes shall discharge into and above the flood level of a trapped open sink or approved receptacle, properly supplied with water, which shall be vented where required by this code and which shall be located in an accessible ventilated place. An air gap shall exist between the outlet end of the waste pipe and the flood-level rim of the receiving sink or approved receptacle. The air gap in each instance shall be at least twice the diameter of the indirect waste pipe. If the indirect waste has sufficient year-round flow to maintain the trap seal, the sink or receptacle need not be supplied with water. The area of the receptor drain line shall be equal to or greater than the total area of all lines discharging into it. The size of the receptor drain line shall be a minimum of 2-inches and the receptor shall be of such size as to prevent overflowing of the receptor, but in no case shall it be less than 2".

Figure P-1202.2

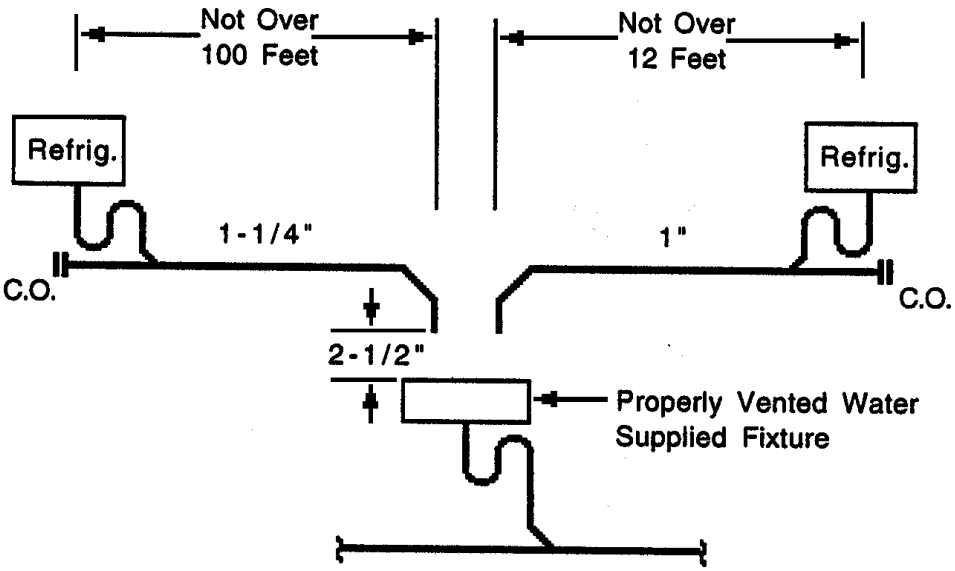

INDIRECT WASTE PIPING

P-1202.3 Discharge of clear water wastes. Water lifts, expansion tanks, cooling jackets, drip or over-flow pans, or similar devices which waste clear water only, shall discharge onto a roof, into a sump, or drain into a trapped fixture or receptacle. Drains from sprinkler systems shall be discharged onto a roof, into a sump, or drain into a trapped fixture or receptacle. Drains from sprinkler systems shall be discharged onto a roof, into a sump or over an open trapped outlet of sufficient size to permit maximum flow from the drain under full system pressure without overflowing.

P-1202.4 Location of trapped fixtures or receptacles receiving indirect wastes. Fixture or receptacles receiving indirect wastes shall not be located within living quarters, and no indirect waste shall discharge into a lavatory, water closet, urinal, bathtub, shower, drinking fountain, or other similar fixture in use for its customary purpose.

P-1202.4.1 Air conditioning condensate. A drain for receiving condensate from air conditioning systems shall be permitted to discharge into a laundry tray fixture or service sink fixture in accordance with Section P-1202.2. In one-family and two-family residences, the condensate water shall be permitted to discharge onto a seeded area that is part of the property where the air conditioning system is located.

SECTION P-1203 SEWAGE AND INDUSTRIAL WASTE

P-1203.1 Materials. Pipes, stacks, vents and connecting joints which conduct or are otherwise in contact with corrosive waste shall be constructed of materials approved by the Department as capable of resisting the destructive action of such waste.

P-1203.2 Treatment. Waste containing harmful properties shall be treated as required by Sections P-1203.2.1 through P-1203.2.3.

P-1203.2.1 Street sewer. Corrosive, toxic, or injurious waste shall not be discharged into a street sewer unless first treated, diluted, or neutralized in accordance with the regulations of the Water Department to prevent injury to the public sewer system and treatment works.

P-1203.2.2 Plumbing system. No waste containing radioactive substances shall be discharged into any portion of a plumbing system, unless so treated, diluted or handled as the Department of Public Health prescribes by regulation to prevent public health hazard.

P-1203.2.3 Public sewer system. Corrosive, toxic, or injurious waste or sanitary sewage not discharged into the public sewer system or as prescribed in Chapter 14 shall be conveyed in a manner approved by the Department and treated, diluted, neutralized, and disposed of in accordance with regulations of the Department of Health of the Commonwealth and the Department of Public Health to ensure efficient and sanitary disposal and to prevent stream pollution, discharge to the ground surface of contaminating substances, creation of offensive odors, contamination of water supplies, and the creation of health hazards and nuisances.

SECTION P-1204 VENTING OF INDIRECT WASTE

P-1204.1 Venting. No indirect waste pipe shall exceed 100 feet in length without venting.

P-1204.2 Vent through roof. Indirect waste stacks receiving fixtures on more than one floor or waste pipes longer than 100 feet, or those draining more than one trapped fixture shall be vented through the roof as required by Chapter 11.

Figure P-1204.2

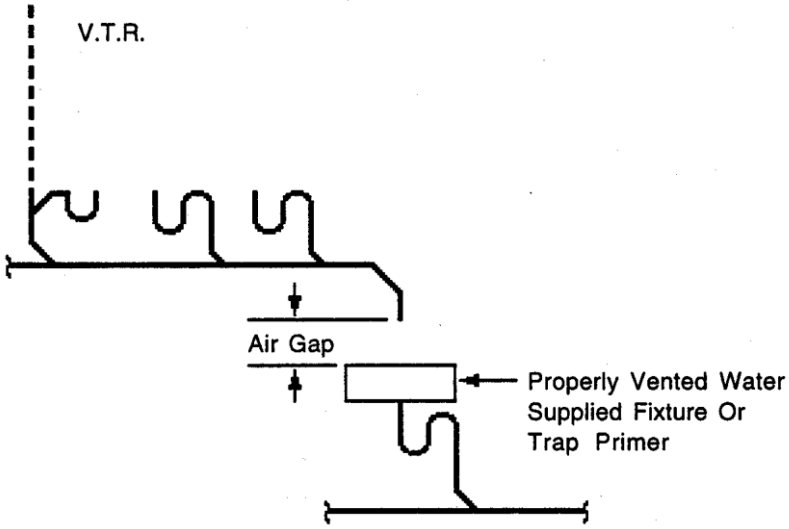

INDIRECT WASTE STACKS

P-1204.3 Trap primers. Trap primers shall be installed in:

1. Safe wastes receiving condensate from heat pump systems.

2. Floor drains not receiving constant water discharge.

Exception: Use Group R-3 one- and two-family dwellings.

Figure P-1204.3

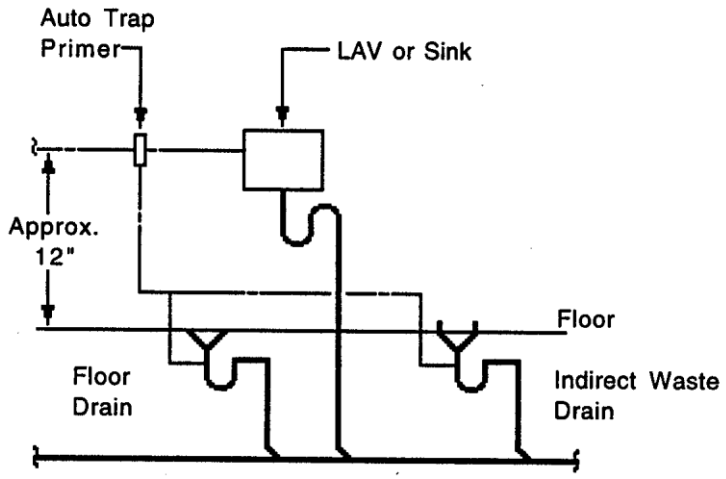

TRAP PRIMERS IN RECEIVERS NOT RECEIVING CONSTANT WATER DISCHARGE

SECTION P-1205 SPECIAL WASTES

P-1205.1 Wastewater temperature. Steam pipes shall not connect to any part of a drainage or plumbing system and water above 140 degrees F (60 degrees C) shall not be discharged into any part of a drainage system. Such pipes shall discharge into an indirect waste receptor connected to the drainage system.

P-1205.2 Neutralizing device required for corrosive wastes. Corrosive liquids, spent acids or other harmful chemicals that destroy or injure a drain, sewer, soil or waste pipe, or create noxious fumes or interfere with sewage treatment processes shall not be discharged into the plumbing system without being thoroughly neutralized or treated by passing through an approved neutralizing device. Such devices shall be automatically provided with a sufficient supply of neutralizing medium so as to make the contents non-injurious before discharge into the drainage system. The nature of corrosive or harmful waste and the method of its treatment shall be approved prior to installation.

P-1205.3 Wastewater to sewer. Wastewater discharged to the City sanitary sewer system must meet the requirements of the Philadelphia Water Department.

[THIS PAGE IS INTENTIONALLY BLANK]

CHAPTER 13
INDIVIDUAL WATER SUPPLY SYSTEMS

SECTION P-1301 PERMITS

P-1301.1 Permit required. No individual water supply shall be installed unless a permit therefore has been obtained from the Department.

SECTION P-1302 APPROVAL BY DEPARTMENT OF PUBLIC HEALTH

P-1302.1 Pre-requisite approval. No permit shall be issued by the Department for individual water supply systems unless the plans and specifications for such proposed installations have been approved by the Department of Public Health as complying with the requirements of the Health Code and regulations.

SECTION P-1303 CONSTRUCTION AND INSTALLATION

P-1303.1 Certification. No individual water supply shall be connected to any plumbing system until the Department of Public Health certifies to the Department that such individual water supply has been constructed and installed in accordance with the requirements of Section P-1302.

[THIS PAGE IS INTENTIONALLY BLANK]

CHAPTER 14
INDIVIDUAL SUBSURFACE SEWAGE DISPOSAL SYSTEMS

SECTION P-1401 GENERAL

P-1401.1 Where required. Where no public sewerage system is available for a single property, an individual sewage disposal system shall be provided for the property in accordance with requirements of the Commonwealth of Pennsylvania Sewage Facilities Act.

P-1401.2 House trap: A house trap will not be required where the main sanitary house drain is connected to an individual on-site subsurface sewage disposal system.

SECTION P-1402 ABANDONED CESSPOOLS

P-1402.1 Abandonment. When a privy vault, septic tank, or loose well is abandoned, the entire contents shall be removed to a depth of 10 feet, and shall be filled with earth, ashes, or cinders to finish grade.

[THIS PAGE IS INTENTIONALLY BLANK]

CHAPTER 15
INSPECTIONS AND TESTS

SECTION P-1501 INSPECTIONS

P-1501.1 Required. Any and all installations made in accordance with this code shall be inspected and approved by a Plumbing Inspector of the Department.

P-1501.2 Timeliness. All new plumbing work and such portions of existing systems as may be affected by new work or any changes shall be inspected within 6 months from the date of filing plans (unless permission for an extension of time is requested in writing by the plumber and granted by the Department) to insure compliance with this code and, where drawings form part of the permit, to verify that the installation and construction of the system are in accordance with the approved drawing.

P-1501.3 Inspection waived. No test or inspection shall be required:

1. Where the plumbing system or part thereof is set up for exhibition purposes, is not used for toilet purposes, and is not directly connected to a water-supply or sewage system; or
2. For repairs included in the definition of minor repairs in Section P-202.

P-1501.4 Inspection and test required. An inspection shall be required for all work for which a permit is required by this code, and tests shall be required for all new installations of plumbing systems and whenever new, relocated, or replacement stacks, interior leaders, building drains, or part thereof, are installed, or major horizontal branches or branch vents are connected thereto.

SECTION P-1502 NOTIFICATION

P-1502.1 Advance notice. The Registered Master Plumber shall give the Department 24-hours advance notice for tests or inspections, unless such delay presents a hazard to the property owner or to public safety.

P-1502.2 Plumber's responsibility. The work should be tested and ready before inspection, and no work shall be covered without authorization from the Department. A call shall be made by the plumber in the event he or she is not ready for inspection.

P-1502.3 Re-testing and re-inspection. If the work does not pass inspection and the inspector must return for a second time, a re-inspection fee of $55.00 will be required.

SECTION P-1503 MATERIAL AND LABOR TESTS

P-1503.1 Test requirements. The equipment, material, power, and labor necessary for the inspection and test shall be furnished by the plumber. Each soil stack and rain leader shall be provided with a test fitting. When of the type having an iron pipe size threaded opening, such openings shall be permitted to be used as a cleanout when installed in accordance with Section P-507.1.

Exception: Outside sheet metal rain leaders.

P-1503.2 Shoring. Shoring shall be installed in ditches and trenches as per OSHA regulations or as regulated by the Department. In some instances, sloping the sides of the excavation as per OSHA will satisfy this requirement if the earth is suitable for this application. Violation of this provision will result in a Stop Work Order and/or penalties prescribed by law.

SECTION P-1504 CERTIFICATE OF APPROVAL

P-1504.1 Certificate authorized. Upon the satisfactory completion and final test of the plumbing system, the Department shall issue a certificate of approval to the owner.

SECTION P-1505 TEST OF DEFECTIVE OR UNSANITARY PLUMBING

P-1505.1 Test required. Where there is reason to believe that the drainage and vent system of any building has become unsanitary or defective, such drainage and vent system shall be subject to an appropriate test as determined by the Department.

SECTION P-1506 TESTING DRAINAGE AND VENT SYSTEMS

P-1506.1 Test required. The piping of drainage and vent systems shall be tested with water or air in accordance with Sections P-1506.2 or P-1506.3 when inspection is required by Section P-1501. Water tests shall not be used in freezing weather. Cleanouts or plugs shall be removed and traps unsealed, if requested by the Department, to ascertain whether the test medium has reached all parts of the system. After the plumbing fixtures have been set and their traps filled with water, the entire drainage system shall be submitted to final inspection.

P-1506.2 Water test. A water test shall be applied to the drainage and vent system in its entirety or in sections. If tested in sections, not more than 30 feet in height on any one system shall be tested at any one time. If applied to the entire system, all openings in the piping shall be tightly closed - except the highest - opening and the system filled with water to the point of overflow. If the system is tested in sections, each opening shall be tightly plugged (except the highest opening of the water) but no section (except the house drain and its connected yard and area drains) shall be tested with less than a 10-foot head of water. In testing successive sections above the house drain, at least the upper 10 feet of the next preceding section shall be re-tested so that no joint or pipe in the building (except the house drain and the uppermost 10 feet of the system) shall have been submitted to a test of less than a 10-foot head of water. The water shall be kept in the system or in the portion under test for at least 15 minutes before inspection starts; the system shall then be tight at all points.

P-1506.2.1 Separate test. The house drain and yard area drains, including all piping to a height of 2 feet above the highest point of the house drain, shall be tested separately. All traps, pipe fittings and joints shall be exposed to view when the test is made. Water shall be introduced into the system in the quantity deemed necessary by the Department. To be approved, the flow of water through the system shall be unobstructed, and there shall be no leakage through any pipe, joint, trap, or fitting.

P-1506.3 Air test. The air test shall be made by attaching an air compressor or testing apparatus to any suitable opening and, after closing all other inlets to the system, by forcing air into the system until there is a uniform gauge pressure of 5 psi. This pressure shall be held without the introduction of additional air for a period of at least 15 minutes. Wooden plugs shall not be used to close openings.

P-1506.3.1 Pre-test option. At the option of the Department, the entire system shall be filled with dense pungent smoke and the roof openings emit smoke before such openings are closed and the air pressure applied.

SECTION P-1507 TEST OF WATER SUPPLY SYSTEMS

P-1507.1 Test required. Upon the completion of a section or of an entire water supply system, that section or system shall be tested and proved tight under a water pressure not less than the working pressure under which it is to be used.

SECTION P-1508 PAINTING AND COATING

P-1508.1 Completion of work. After tests have been made and approved by the inspector, covering, insulation, coating or painting of the drain, vent and water piping shall be permitted. Decals on soil, waste, and vent piping, and hot, cold and return water piping shall be installed every 10 feet on covered and uncovered lines.

CHAPTER 16
MODULAR CONSTRUCTION

SECTION P-1601 CODE COMPLIANCE

P-1601.1 Code application. All manufactured, modular and industrialized buildings or portions thereof are subject to the requirements of this code in its entirety

Exception: Industrialized housing which is defined by and subject to the Pennsylvania Industrialized Housing Act (35 P.S. Sections P-1651.1 through P-1651.12 and regulations pursuant thereto (16 PA Code Chapter 29). All permits and fees required by this code for site work up to the exterior walls of industrialized housing shall apply.

P-1601.2 Construction documents. Building system documentation submitted with industrialized housing shall include tests of the completed plumbing installed at the manufacturer's facility. Such test documentation shall bear the approval of the evaluation agency in accordance with the Pennsylvania Industrialized Housing Act. The Certificate of Occupancy will not be issued in the absence of such documentation.

[THIS PAGE IS INTENTIONALLY BLANK]

APPENDIX A

This appendix contains the portion of Bill No. 940357, signed by the Mayor on February 17, 1995 which appears in Title 9, Chapter 9-1000 of The Philadelphia Code and relates to the licensing of the plumbing trade.

SECTION 3. Chapter 9-1000 of The Philadelphia Code is hereby amended to read as follows:

CHAPTER 9-1000. TRADES

* * *

Section 9-1003. Plumbers.

(1) Definitions.

(a) Plumbing. Drainage, water piping, or the construction, alteration and repairing of any drainage, cesspools, trap, waste vent or water piping, and fixtures attached thereto, except gas or electric heaters.

(2) License required.

(a) Except as provided in subsection 2(b) no person shall perform plumbing work unless that person is either:

(.1) A Master Plumber licensed pursuant to this Section:

(.2) A journeyman plumber licensed pursuant to this Section: or

(.3) An apprentice registered pursuant to this Section who performs such plumbing work under the direction of a licensed plumber.

(b) This Section shall not prohibit a helper or laborer performing ordinary unskilled labor (such as excavating, drilling, cleaning and moving) under the direction of a licensed plumber, nor shall it prohibit any person from performing minor plumbing repairs as defined in subsection 8-201.*2 (P-202.0)*[1].

(3) Master Plumber License.

(a) Applications for a Master Plumber's license shall be made to the department on forms provided by the department. Such application must include the name, home address and business address of the applicant, certify that the applicant has been a duly registered apprentice plumber for not less than four years and a licensed journeyman plumber for at least one year.

(b) Upon receipt of the application and payment of the application and examination fee as set forth in subsection 9-1003(7), the department shall examine the applicant to determine whether the applicant has the requisite knowledge of a Master Plumber. If the applicant passes such examination, pays the annual license fee as set forth in subsection 9-1003(7) and provides satisfactory evidence that the insurance requirements of section 9-1003(5) have been met, then the applicant shall be licensed and registered by the department.

(c) The Department shall issue to each licensed and Registered Master Plumber a license, a permanent registration number stating that the applicant has successfully passed the examination for a Master Plumber and is entitled to apply for reregistration annually thereafter, a certificate of registration, and one metal plate or decal bearing the words "Registered Master Plumber, Philadelphia", and the permanent registration number. If additional metal plates or decals are required, they shall, upon written application, be furnished by the Department.

(d) A Master Plumber's license is valid for one year, and may be renewed upon payment of the annual license fee as set forth in subsection 9-1003(7).

(e) A Master Plumber may, upon application to the department, be placed on an inactive master plumber list, provided he or she surrenders his or her current Master Plumber license, ceases to maintain a place of business for plumbing, removes all advertising directly or indirectly pertaining thereto, and applies for and receives a current annual license for journeyman plumber. A Master Plumber on the inactive

list who wishes to regain active status as a licensed Master Plumber shall make application on forms provided by the department, which shall grant such application when the applicant surrenders his or her current annual journeyman plumber license, establishes a bona fide business address, and pays the required fee for the current annual Master Plumber license.

(4) Apprentices and Journeymen.

(a) No person shall work as a journeyman plumber unless he or she is licensed with the department. Applications for a journeyman's license shall be made on forms provided by the department. Such application must include the name and home address of the applicant, certify that the applicant has been a duly registered apprentice plumber for not less than four years, and include proof, in the form acceptable to the department, of such employment. Upon receipt of the application and payment of the application and examination fee as set forth in subsection 9-1003(7), the department shall examine the applicant to determine whether the applicant has the requisite knowledge of a journeyman plumber. If the applicant passes such examination, then the applicant shall be licensed by the department upon payment of the annual license fee as set forth in subsection 9-1003(7)(b).

(b) A journeyman plumber's license is valid for one year, and may be renewed upon payment of the annual license fee as set forth in subsection 9-1003(7)(b).

(c) No person shall work as an apprentice plumber unless he or she is registered with the department. Application for registration shall be on forms provided by the department, and shall include the written certification of the employer of the apprentice that such employer is a licensed Master Plumber. An apprentice must register again if the apprentice changes employers.

Apprentices must be at least sixteen years of age.

(5) Master Plumber Insurance Requirements.

(a) All licensed Master Plumbers shall maintain the following insurance from insurers authorized to do business in the Commonwealth of Pennsylvania:

(.1) Workers' compensation where applicable: Statutory limits.

(.2) Comprehensive general liability: $200,000 per occurrence combined single limit for bodily injury including death and property damage liability.

(b) Copies of all insurance certificates shall be submitted to the Department prior to the issuance of a renewal license.

(c) The licensee shall notify the department of any change in a required insurance policy or cancellation thereof within five days of such change.

(6) Master Plumbers: Required and Prohibited Conduct.

(a) No Master Plumber shall permit his or her name to be used by any other person, directly or indirectly, either to obtain a permit or to do any work under his or her license.

(b) Every licensed Master Plumber shall have a bona fide place of business and shall display on the front of that place of business the word "Registered" and the name or names of the person, firm, or corporation and Master Plumber registration number in letters not less than three inches high.

(c) No person, other than a licensed Master Plumber, shall be allowed to display the sign of plumbing or plumbing repair or house drainage or water piping, or any advertisement pertaining thereto.

(d) Every licensed Master Plumber shall give a ten day notice of any change in his or her place of business, and upon his or her retirement from business shall surrender his or her license and registration certificate to the Department.

(7) Fees.

(a) The application and examination fees for plumbers shall be as follows:

(.1) Journeyman Plumber

First application and examination $125

First retake of examination $75
Additional retakes of examination $125

(.2) Master Plumber
First application and examination $250
First retake of examination $200
Additional retakes of examination $250

(b) The annual license fee for plumbers shall be as follows:

(.1) Apprentice plumber $25

(.2) Journeyman plumber $100

(.3) Master Plumber $180

(c) A Master Plumber who is delinquent in the payment of his or her annual license fee and who desires to continue to engage in the business of plumbing shall pay an additional delinquency fee of $50.

(8) License Suspension and Revocation.

(a) The department may suspend or revoke any license granted under this Section for any of the following reasons: After an administrative hearing conducted within 10 days.

(.1) Repeated failure to comply with the provisions of this Section or with the provisions of Title 8 *(Philadelphia Plumbing Code)*[1];

(.2) Failure to obtain or maintain the insurance required pursuant to subsection 9-1003(5);

(.3) Work completed in an unworkmanlike manner;

(.4) Failure to pay any fine imposed for a violation of any provision of this Section or of Title 8 *(Philadelphia Plumbing Code)*[1] within ten (10) days of imposition by a final order from which all appeals have been exhausted; or

(.5) Failure of the licensee or the licensee's business to pay any tax or charge imposed pursuant to Title 19 in connection with the business or the licensee's activity.

9-1003(8)(a)(R) The suspension and revocation of licenses shall be applied according to the following schedule:

- Upon the second offense .....Thirty (30) day suspension of license
- Upon the third offense.....Sixty (60) day suspension of license
- Upon the fourth offense .....Ninety (90) day suspension of license
- Upon the fifth offense .....Revocation of license

Notice of a proposed suspension or revocation of a license, and notice of the opportunity to receive an administrative hearing prior to suspension or revocation, will be sent by the department by certified mail.

SECTION 4. It is the intent of this Ordinance to enact comprehensive provisions regulating plumbing and the licensing of plumbers and plumbing businesses in the City of Philadelphia, notwithstanding any prior law to the contrary.

SECTION 5. This Ordinance shall take effect immediately. All existing valid licenses granted prior to the enactment of this ordinance pursuant to Title 8 *(Philadelphia Plumbing Code)*[1] of The Philadelphia Code, shall remain valid following the enactment of this ordinance, and may be renewed upon payment of the annual license fee.

FOOTNOTE:

(1) Items shown in *italics* are not part of the original ordinance but were added in this appendix for clarity to the code user due to reformatting of portions of The Philadelphia Code including the Philadelphia Plumbing Code.

[THIS PAGE IS INTENTIONALLY BLANK]

PLUMBING CODE INDEX

By section number
(This index does not locate every mention of a listed topic.)

A

Abandoned piping, P-606.0
Abbreviations, P-203.0
Acid systems, P-902.1, P-902.2, P-1102.1.1
Acid waste, P-1203.0
Adequate water supply, P-801.2.3, P-803.0
Administration, Chapter 1
Air gap
  Alternate device, P-804.4, P-806.1.1
  Definition, P-202.0
  Drinking fountains, P-713.1
  Indirect waste, P-1202.2
  Potable water, P-804.3
  Prohibited fixtures, P-716.1(#8)
  Swimming pools, P-719.1,
Air test, P-1506.3
Anchors and hangers
  Pipe support, P-603.0
  Unstable soil, P-902.3.3
Apprentice, P-202.0
  Application, Appendix A
Approval, certificate of, P-1504.0
Approved, P-202.0
Area drains
  Definition, P-202.0
  Dwelling, subsurface, P-1003.3,
  General, P-715.0
  Premises, P-1001.3,
  Rainwater conductors, P-1001.4
  Storm water, P-1001.2
  Tests, P-1506.2.1

B

Backflow
  Definition, P-202.0
  Fire suppression, P-804.6
  Floor drains, P-714.1
  Potable water, P-804.5
  Swimming pools, P-719.1
  Water supply, P-806.0
Backwater valves, P-514.0
Bar and soda-fountain sinks
  Fixture units, Table P-904.1
  Indirect waste, P-1201.1
  Waste pipe, P-904.5,
Blowoff connections and tanks, P-906.0
Branch, P-202.0
Building drain, (See House drain)
Building sewer, (See House and storm drains)
Building subdrain, (See Subsoil drain)
Building trap, (See Trap, house)

C

Canopies and marquees, P-1006.3
Caulking ferrules, brass, P-304.0, Table P-304
Cesspools, abandoned, P-1402.0
Change in direction of piping, P-903.6
Check valves
  Fire suppression, P-804.6, P-804.6.2
  General, P-814.0
Circuit vent
  Connection, P-1109.2
  Definition, P-202.0
  Size, P-1110.3
Cleanouts
  Access, P-507.6
  Material, P-507.4
  Required, P-507.1
  Size, P-507.5
  Traps, P-501.4
Condensate and steam exhaust
  Indirect waste, P-1201.1(#7), P-1201.4.1
  Relief valve, P-815.1
  Residential, P-815.2
  Steam discharge, P-906.1
  Tank size, P-906.2,
Continuous flow, fixture unit value, P-707.2, P-904.3
Continuous vent, P-202.0
Continuous waste
  Definition, P-202.0
  Indirect waste discharge, P-1201.1 (#1)
  Trap exceptions, P-501.1
Control valves, water-supply, P-810.2, P-810.3
Cross connection, P-202.0, P-804.0

D

Dead end, P-202.0, P-904.6
Defective plumbing, test, P-1502.3, P-1505.0
Definitions, P-202.0, P-720.1
Developed length, P-202.0
Direction, changes in, P-903.6
Dishwasher, waste, P-501.1
Disinfection of water supply tanks, P-808.4
Double offset, P-202.0
Downspout, (See Leader)
Drain
  Definition, P-202.0
  See
  Area drain
  Fixture drain
  Floor drain

House drain
House storm drain
Storm drain
Subsoil drain
Drainage below sewer level, P-905.0, P-1003.2
Drainage loads, P-1006.0
Drainage piping
Abandoned, P-606.1
Change in direction, P-903.6
Installation, P-809.4, P-903.0, P-904.6
Materials, Chapter 3, P-717.0, P-902.0, P-1005.0
Offsets, venting, P-1107.0
Size, P-901.4.2, P-904.0, P-1006.0
Soil and waste, Chapter 9
Storm water, Chapter 10
Supports, Chapter 6
Swimming pools, P-719.2
Drainage system, (Also see drainage piping)
Definition, P-202.0
Interceptors, P-508.0, P-509.0, P-510.0, P-511.0, P-512.0
Test, P-1506.0
Under same ownership, P-901.4
Venting, Chapter 11
Drainage type fittings
Ferrous pipe, P-1102.1.2
Installation, P-903.7
Materials, Table P-305, P-305.5
Required, P-902.4
Draining of water pipes, P-810.4
Drilling and tapping, P-903.7
Drinking fountains, P-713.0, P-810.5
Dry vent, P-202.0

E

Effective opening, P-202.0
Ejectors
Direct discharge, P-905.6
Fresh air inlets and vents, P-1106.0
Tanks, P-905.0
Existing house drains, P-901.5

F

Ferrules, caulking, P-304.0
Fittings
Curb trap replacement, P-411.3
Drainage type (See drainage type fittings)
Flared joint, P-406.1
Materials, P-305.0, P-809.0, P-1005.0
Merion, P-1105.1.1.1
Prohibited, P-717.2, P-809.12
Soldered, P-405.1
Union and compression, P-409.3
Vent, P-1102.1
Fixture
Alternate materials, P-703.0
Combination, P-202.0, P-501.1 (Exc. 1)
Future, P-904.6
General, Chapter 7
Identification, P-303.1
Installation, P-301.1, P-302.0, P-705.0, P-904.7
Materials, P-301.2, P-302.0, P-305.0, P-702.1
Overflow, P-704.0, P-706.5
Prohibited, P-716.0, P-1202.4
Quality, P-702.0
Used, P-717.1
Fixture branch, P-202.0, P-904.5
Fixture drain, P-202.0, P-506.0,
Fixture joints, P-409.5
Fixture, supply pipe
Definition, P-202.0
Prohibited condition, P-716.1 (#5)
Size, P-811.2, P-811.3
Fixture trap size, P-505.2, P-506.0
Fixture unit
Continuous flow, P-904.3
Definition, P-202.0
High-rise buildings, P-904.4.4
Maximum load, P-904.4
Roof allowance, P-1006.4.1
Values, P-904.1, P-904.2, P-904.3
Vent header sizing, P-1108.2
Vent sizing, P-1110.4
Flood level, P-202.0
Flood-level rim, P-202.0
Floor drain
Garages, P-508.2
General, P-714.0
Joints, P-409.5
Trap primers, P-1204.3 (#2)
Traps, P-501.6
Flow velocity, P-903.3
Flush tanks, automatic, P-707.2
Flush valves, P-202.0, P-706.5, P-706.6, P-811.1, P-811.3
Flushometers
Definition, P-202.0
Minimum pressure, P-811.1
Urinals, P-707.3, P-720.2.3
Water closets, P-706.6, P-720.2.2,
Water supply, P-811.3, P-811.4
Food grinders (See Garbage Grinders)
Foundation drains, P-1003.0
Fresh air inlet
Definition, P-202.0
Double traps, P-501.2 (#3)
General, P-503.0,
House traps, P-502.0
Interceptor traps, P-508.7

Oil interceptors, P-509.3
Sumps and ejectors, P-905.5, P-1106.0
Frost-proof closet, P-202.0, P-706.7
Frost protection, P-501.5, P-605.1, P-607.0, P-903.4

G

Garbage grinders, P-513.0, Table P-904.1 (note b.)
Grade
Building storm drains, P-1006.1, P-1006.2
Definition, P-202.0
Horizontal drainage piping, P-903.1, P-903.2, P-903.3, P-904.4
Vent pipe, P-1109.1
Grease interceptor, (See Interceptor)
Grease trap, P-508.7, Table P-904.7

H

Hair and lint interceptor, (See Interceptor)
Hangers and anchors, P-603.0, P-902.3.3
Horizontal branch
Basement fixtures, P-901.6
Definition, P-202.0
Fixture load, P-904.4
Size, P-904.4.2
Tests, P-1501.4
Ventilation, P-1105.1, P-1108.1, P-1110.4
Horizontal drainage piping
Basement fixtures, P-901.6
Cleanouts, P-507.3
Underground support, P-602.2,
Horizontal pipe, P-202.0, P-1105.0
Hot water safety valves, P-812.0, P-813.1, P-814.0
Hot water shut-offs, P-810.3, P-813.0
House drain
Combined, P-202.0, P-1006.4
Common, P-901.4.1, P-901.4.2
Definition, P-202.0
Existing, P-901.5
Fixture load, P-904.4
Installation, P-902.3
Material, P-1005.2
Size, P-904.4.3, P-904.5.1, P-1006.4.1
Subsoil drain connection, P-1003.1
Sump and ejector connection, P-905.5
Tests, P-1506.2.1
Traps, P-501.7, P-502.0
House trap
Abandoned drainage, P-606.1
Definition, P-202.0
General, P-501.7
Private sewer, P-901.3
Size, P-502.0
Hydrant drains, P-807.1
Hydraulically operated equipment, P-907.0

I

Identification of materials and fixtures, P-303.0
Indirect and special waste
Commercial requirement, Table P-904.7
Frost proof closets, P-706.7.1
General, Chapter 12
Hydrant drains, P-807.1
Receptor location, P-1202.4, P-1202.4.1
Relief outlets, -815.0
Required, P-1201.1
Special waste approval, P-901.2
Water supply tank drains, P-808.7
Indirect waste pipe
Definition, P-202.0
Discharge, P-1202.2, P-1202.3
General, P-1202.0
Transformer vault, , P-901.1.1 (Exc. #2),
Venting, P-1204.0
Individual sewage-disposal system, P-1001.6, Chapter 14
Individual water supply, Chapter 13
Industrial waste, P-202.0, P-1203.0
Interceptor
Access, P-508.3, P-509.5, P-510.2, P-512.2, P-705.1
Definition, P-202.0
Dry cleaners, P-509.1 (#2), P-511.1 (#3)
Efficiency, P-508.4
Food preparation, P-510.1 (#1), (#2)
Garages, P-508.2, P-509.1 (#1)
Grease, P-202.0, P-508.5, P-508.6 (Exc.), P-510.0
Hair and lint, P-511.0
Laundry, P-511.1 (#1), (#5)
Oil, P-509.0
Paint factories, P-509.1 (#3)
Printing and ink plants, P-509.1 (#4)
Required, P-508.1
Sand, P-512.0, P-1003.1
Slaughterhouses, P-510.1 (#2)
Venting, P-508.7, P-509.3
Intermediate water shut-offs, P-813.0

J

Joints
Brazed, P-408.0
Caulked, P-403.0
Clay and concrete, P-407.0
Expansion, P-409.4, P-1002.0
Flared, P-406.0
Gasket, P-404.0
General, Chapter 4
Ground, P-409.2
Hot-poured, P-403.1
Material, P-305.1, P-305.5
Precast bituminous, P-407.1
Slip, P-409.1, P-409.2
Sweated, soldered, P-405.0

Journeyman plumber, P-202.0

L

Lateral, P-202.0
Laundries, waterproof floors and walls, P-709.0
Laundry interceptors, P-511.0
Lavatories and sinks
General, P-710.0, P-712.0
Indirect waste into, P-1202.2
Materials, P-702.1
Minimum number, P-701.0
Traps, P-504.0, P-506.0
Water conservation, P-720.2.4, P-720.2.6, P-720.8.2, P-720.8.4
Water supply, P-811.2
Lawn sprinkler system, P-806.4, P-809.8
Leader
Definition, P-202.0,
Discharge, P-1001.4, P-1005.2
Materials, P-1005.1, P-1005.2
Prohibited use, P-1004.2
Size, P-1006.0
Tests, P-1501.4, P-1503.1
Traps, P-1001.5, P-1103.1
Loop vent, P-202.0, P-1109.2

M

Main, P-202.0
Main sewer
Combined, P-1006.4
Connection required, P-901.3
Definition, P-202.0
Separate, P-1004.1
Special waste, P-1203.2.3
Master plumber, P-202.0
Materials
Acid wastes, P-902.0
Acid waste vents, P-1102.1.1
Approved, P-302.1
Cleanouts, P-507.4
Fixtures, P-702.1
General, Chapter 3
Identification, P-303.0
Industrial waste, P-902.0, P-1102.1.1, P-1203.1
Leaders, P-1005.1, P-1005.2
New, P-302.0
Plumbing installations, P-305.0
Soil and waste piping, P-902.0
Storm drains, P-1005.0
Tables, P-304, P-305, P-305.5
Traps, P-504.0, P-505.2, P-706.7.2
Used, P-717.0
Vents, P-1102.0
Water distribution and supply, P-305.6, P-305.7, P-809.0
Meat packing plants, P-510.1 (#2)
Minor repairs, P-202.0, P-1501.3

N

Non-potable water, P-802.2, P-804.1

O

Offset
Definition, P-202.0
Venting of, P-1107.0
Oil interceptors, P-509.0

P

Painting and coating, P-808.3, P-1508.0
Permits
Application, P-103.1
Penalty, P-103.2
Revocation, P-103.3
Sub Contractors, P-104.0
Pipe cleanouts, P-507.0
Piping, abandoned, P-606.0
Plumber, P-202.0
Plumbing fixture, P-202.0, (See fixture)
Plumbing system, P-202.0
Pneumatic ejector, P-1106.1, P-1106.2
Portable toilets, P-718.1
Potable water
Definition, P-202.0
Piping, P-305.6, P-305.7
Protection, P-804.0, P-806.0
Quality, P-802.0
Required, P-801.0
Pressure tanks, P-808.1, P-808.2
Private sewage disposal systems, P-1401.1.
Private sewer, P-202, P-901.3
Private water supply, Chapter 13
Protection of piping, P-605.0
Protection of trap seals, P-1103.0
Protection of water pipes against freezing, P-605.1, P-607.0, P-808.5
Pumps, sump, P-905.0, P-1003.2, P-1003.3
Pumps, wells and other appliances, P-807.0

R

Radioactive wastes, P-1203.2.2
Rain water conductors, P-202.0, P-1001.4, P-1005.1 (Also see Leader)
Refrigerator, indirect waste, P-1201.1 (#1)
Relief outlet connections, P-815.0
Relief tank, hydraulic equipment, P-907.0
Relief valves, P-812.0
Relief vent
Definition, P-202.0
High-rise buildings, P-904.4.4, P-1104.1, P-1104.3
Size, P-1110.4
Repair, minor, (See Minor repairs)

Required indirect wastes, P-1201.0
Return offset, P-202.0
Rim, P-202.0
Riser, P-202.0
Rodent protection, P-608.0

S

Sand interceptor, P-202.0, P-512.0, P-1003.1
Sanitary sewer, P-202.0
Secondary water shut-off valves, P-810.3
Septic tanks, Chapter 14
Sewage, P-202.0
Sewage disposal system, individual, Chapter 14
Sewage ejectors, (See Ejectors)
Sewer, building (see House drain)
Shower receptors, P-702.1 (#8), P-711.1
Showers
    General, P-711.0
    Quality, P-702.1 (#8),
    Required, P-701.1
    Trap size, Table P-506
    Water conservation, P-720.2.5, P-720.8.3
Shut-off valves
    Car washes, hand, P-720.6
    Intermediate, P-813.0
    Water supply, general, P-810.0
Single soil or waste stack system, P-202.0, Figure P-1101.0, Figure P-1101.0a,
Sinks, (See Lavatories and sinks)
Size of pipe or tubing, P-202.0
Sizing, of drainage system
    General, P-904.0
    House trap, P-502.0,
    Increase in size for height, P-904.4.4
    Leaders, P-1006.0
    Soil and waste pipe, P-904.5
Sizing, of water supply, P-811.0
Slant, P-202.0
Slope of piping, (See Grade)
Soda fountain, indirect waste, P-904.5, P-1201.1 (#1)
Soil and waste piping
    Above ground, P-602.1, P-607.1, P-902.1
    General, Chapter 9
    House drains, (See House drain)
    Sizes, P-506.0, Table P-506, P-904.4, P-904.5
    Underground, P-602.2, P-607.3
Soil and waste stack, minimum size, P-904.4.1, P-904.4.4, P-904.5
Soil pipe, P-202.0
Soldered joints, P-405.0
Special events, P-718.1
Stack
    Base supports, P-601.3
    Cannot serve as leaders, P-1004.2
    Capacity, P-904.4.1
    Definition, P-202.0
    Loading tables, Table P-904.4
    Minimum size, P-904.4, P-904.4.1, P-904.4.4, P-904.5, P-1110.3
    Offsets, P-1107.0
    Terminal lengths, P-1110.1
    Velocity breaks, P-1104.0
    Vent, P-1004.2, P-1103.2, P-1103.3, P-1110.2, P-1110.3
Stack vent, P-202.0, P-1103.2, P-1103.3, P-1103.3.1,
Steam condensate and blowoff, (See Condensate and steam exhaust)
Storm drain
    Combined with sanitary drainage, P-1006.4
    Definition, P-202.0
    House, (See House drain)
    Material, P-305.1, Table P-305, P-1005.0
    Minimum size, P-1006.2
Storm sewer, P-202.0
Storm water drainage piping, Chapter 10
Subsoil drain, P-202.0, P-1003.0
Sumps, (See Pumps, sump)
Supports
    Fixture, P-705.2
    Pipe, Chapter 6
    Water closet, P-706.2
Surge tank, hydraulic equipment, P-907.1, P-907.2
Swimming pools, P-719.0, P-720.4, P-1201.1 (#1)

T

Tanks, water supply, P-808.0
Temporary toilet facilities, P-718.0
Tests
    Defective or unsanitary plumbing, P-1505.0
    Drainage and vent systems, P-1506.0
    Material and labor, P-1503.0
    Water supply system, P-1507.0
Trap
    Bath, P-505.0
    Cleanouts, P-501.4, P-507.0, P-1503.1
    Definition, P-202.0
    Floor drains, P-501.6
    General requirements, P-501.0
    House, P-202.0, P-501.7, P-502.0
    Laundry tray, P-501.1 (Exc. #4), Table P-506
    Lavatory, P-504.0
    Material, P-305.0, Table P-305
    Primers, P-1204.3
    Prohibited, P-501.2
    Seal, P-202.0, P-409.3, P-501.3, P-510.4, P-512.2, P-1103.0, P-1202.2
    Size, P-501.1, P-502.1, P-505.1, P-506.0, Table P-506, P-513.2, P-904.7, P-1006.3
    Storm-water system, P-1001.5
Treatment of industrial waste, P-1203.2
Trenching, P-602.2, P-805.1, P-902.3, P-1503.2

U

Underground drainage piping, P-305.3, P-602.2, P-602.2.1, P-902.2, P-902.3, P-903.4, P-903.5
Underground water pipe, P-805.0, P-809.4
Unions, P-409.3
Urinals
Compartments, P-708.0
Fixture units, P-904.1
Flushometers, P-707.3, P-720.2.3, P-811.3, P-811.3.3, P-811.4
General, P-707.0
Number required, Table P-701
Quality, P-702.0
Trough, P-707.2, P-904.1
Water conservation, P-720.2.3
Water supply, P-811.2, P-811.3, P-811.4
Used material, P-717.0

V

Vacuum relief valves, P-812.3
Valves, backwater, P-514.0
Vent
Branch, P-202, Figure P-1101.0, Figure 1101.0a, P-1109.1, P-1109.2
Circuit, P-202.0, Figure P-1105.1, P-1109.2,
Connections, P-1109.0
Continuous, P-202.0
Dry, P-202.0
Ejectors, P-1106.0
Existing buildings, P-1105.1.2
Fixture, P-202.0, P-1105.1, Figure P-1105.2a, Figure P-1105.2b
General, Chapter 11
Grades and connections, P-1109.0
Headers, P-1108.0, Figure P-1108.0
Horizontal branches, Figure P-1101.0, P-1105.0
Length, P-1110.0, Table 1110.4
Loop, P-202.0, Figure P-1105.1, Figure P-1105.2a, Figure P-1105.2b, P-1109.2,
Materials, Table P-305, P-1102.0
Relief, (See Relief vent)
Size and length, P-1104.3, P-1105.1, P-1105.1.1, P-1105.1.2, P-1105.2, P-1110.0, Table P-1110.4
Stack, (See Stack vent)
System, P-202.0
Terminals, P-1103.4, P-1108.2
Wet, P-202.0
Yoke, P-202.0, P-1107.1.1, Figure P-1107.1.1
Venting
Building drainage system, P-1103.3.1
Fittings, P-1102.1, P-1102.1.2
General, Chapter 11
Indirect wastes, P-1204.0
Interceptors, P-509.3, P-508.7
Offsets, P-1107.0, Figure P-1107.1.1
Required, P-1101.1

W

Waste
Clear-water discharge, P-1202.3
Indirect, (See Indirect and special waste)
Industrial, P-202.0, P-508.1, P-902.2, P-1102.1.1, P-1203.0
Liquid, P-901.3
Pipe, P-202.0
Waste stacks, minimum sizes, P-904.4, P-904.4.1, P-904.4.4, P-904.5
Water closets
Basement/cellar, P-708.6, P-708.7
Compartments, P-708.0
Construction sites, P-718.3
Fixture units, P-904.1
Float valves, P-706.4
Flush valves (See Flush valves)
Flushometers (See Flushometers)
Frost-proof, (See frost-proof closet)
General, P-706.0,
Number required, Table P-701
Portable, P-718.1
Supports (See Supports)
Water conservation, P-720.2.1, P-720.2.2, P-720.8.1,
Water supply, P-811.2, P-811.3, P-811.4
Water distribution pipe
Backflow protection, P-806.0
Cross connections, P-804.0
Definition, P-202.0
Material, P-305.1, P-305.6, P-305.7, P-809.0
Minimum size, P-810.1
Shut-off valves, -810.2, P-810.3
Underground, P-607.3, P-805.0, P-902.3.1, P-902.3.2
Water main, P-202.0
Water outlet, P-202.0
Water service pipe
Abandoned, P-606.2, P-606.3
Backflow protection, P-806.0
Cross connections, P-804.0
Definition, P-202.0
Material, P-305.1, P-305.6, P-305.7, P-809.0
Shut-off valve, P-810.2
Size, minimum, P-810.1
Underground, P-607.3, P-805.0, P-902.3.1, P-902.3.2
Water supply
Control, P-810.2
Fixtures, P-801.1, P-803.0, P-811.0
Individual, Chapter 13
Pressure, maximum, P-720.2.7, P-720.8.5
Pressure, minimum, P-811.1

Quality, P-802.0
Required, P-801.1
Separate, P-801.2
System, P-202.0
Tanks, P-808.0
Tests, P-1507.0
Wells, pumps and other appliances, P-807.0
Wet vent, P-202.0

Y

Yard drains, P-512.1, P-1001.5 (Also see Area drains)
Yoke vent, P-202.0
Yoke venting offsets, P-1107.1.1, Figure P-1107.1.1

[THIS PAGE IS INTENTIONALLY BLANK]

Portions of this publication reproduce excerpts from the
2009 International Plumbing Code,
International Code Council, Inc., Washington D.C.
Reproduced with permission. All rights reserved.
(www.iccsafe.org)