ENGINEERING
SHOP
VINYL / LAYOUT
ROUTING / KNIFE

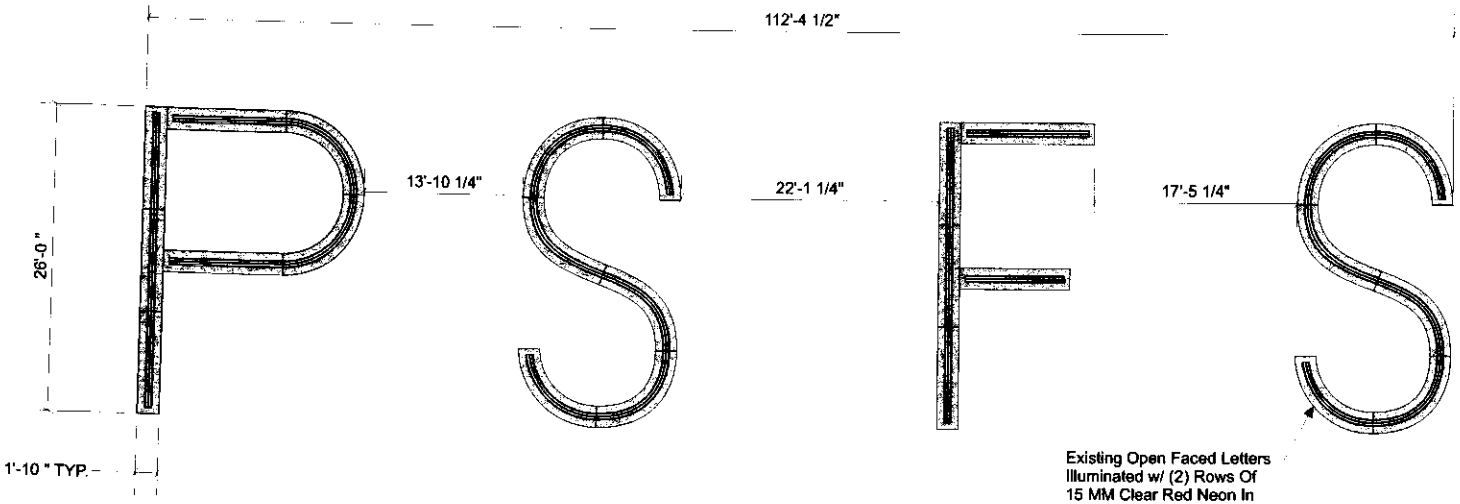

Existing Open Faced Letters Illuminated w/ (2) Rows Of 15 MM Clear Red Neon In Center Of Stroke

FRONT ELEVATION
SCALE: 1" = 120"

2
07-06-15

Note: This sign is intended to be installed in accordance with the requirements of Article 600 of the National Electrical Code and/or other applicable local codes. This includes proper grounding and bonding of the sign.

PHILADELPHIASIGN
BRINGING THE WORLD'S BRANDS TO LIFE

707 West Spring Garden Street
Palmyra, New Jersey 08065

Phone: 856.829.1400
Fax: 856.829.8548
www.philadelphiasign.com

CUSTOMER:
LOEWS

JOB NUMBER:

SIGN TYPE:

LOCATION:
1200 MARKET STREET
PHILADELPHIA, PA 19107

DATE:
1/19/15

DRAWN BY:
PZV

REVISION:

Number:	Date:	By:
2	7/6/15	BJF

SHEET: ENG DEPT
1 OF 6

DWG NUMBER:

ENGINEER SEAL:

MAX DESIGN WIND SPEED 90 MPH
EXPOSURE C

THIS IS AN ORIGINAL UNPUBLISHED DRAWING CREATED BY PSCO. IT IS SUBMITTED FOR YOUR PERSONAL USE IN CONJUNCTION WITH A PROJECT BEING PLANNED FOR YOU BY PSCO. IT IS NOT TO BE SHOWN TO ANYONE OUTSIDE YOUR ORGANIZATION NOR IS IT TO BE USED, COPIED, REPRODUCED, OR EXHIBITED IN ANY FASHION.

ENGINEERING
SHOP
VINYL / LAYOUT
ROUTING / KNIFE

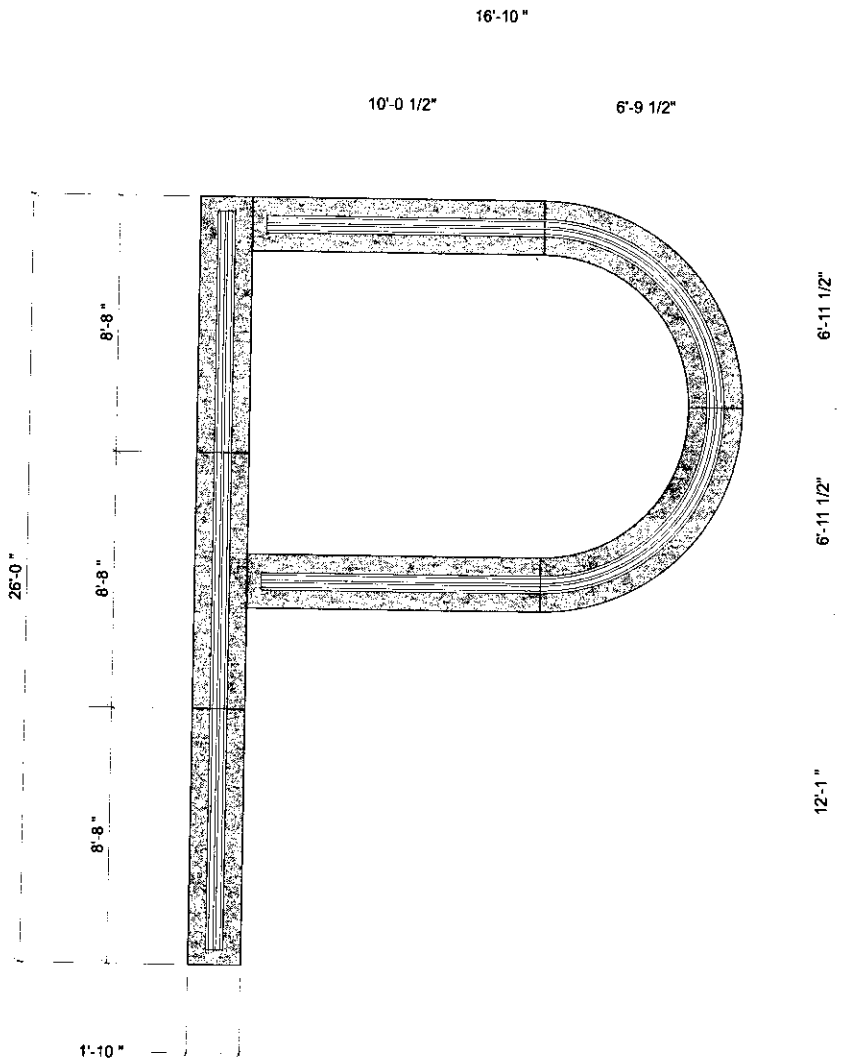

FRONT ELEVATION
SCALE: 1/4" = 1'
2
07-06-15

Note: This sign is intended to be installed in accordance with the requirements of Article 600 of the National Electrical Code and/or other applicable local codes. This includes proper grounding and bonding of the sign.

PHILADELPHIASIGN
BRINGING THE WORLD'S BRANDS TO LIFE

707 West Spring Garden Street
Palmyra, New Jersey 08065

Phone: 856.829.1460
Fax: 856.829.8540
www.philadelphiasign.com

CUSTOMER:
LOEWS

JOB NUMBER:

SIGN TYPE:

LOCATION:
1200 MARKET STREET
PHILADELPHIA, PA 19107

DATE:
1/19/15

DRAWN BY:
PZV

REVISION:

Number:	Date:	By:
2	7/6/15	BJF

SHEET: ENG DEPT
2 OF 6

DWG NUMBER:

ENGINEER SEAL:

MAX DESIGN WIND SPEED 90 MPH
EXPOSURE C

THIS IS AN ORIGINAL UNPUBLISHED DRAWING CREATED BY PSCS. IT IS SUBMITTED FOR YOUR PERSONAL USE IN CONJUNCTION WITH A PROJECT BEING PLANNED FOR YOU BY PSCS. IT IS NOT TO BE SHOWN TO ANYONE OUTSIDE YOUR ORGANIZATION NOR IS IT TO BE USED, COPIED, REPRODUCED, OR EXHIBITED IN ANY FASHION.

ENGINEERING
SHOP
VINYL / LAYOUT
ROUTING / KNIFE

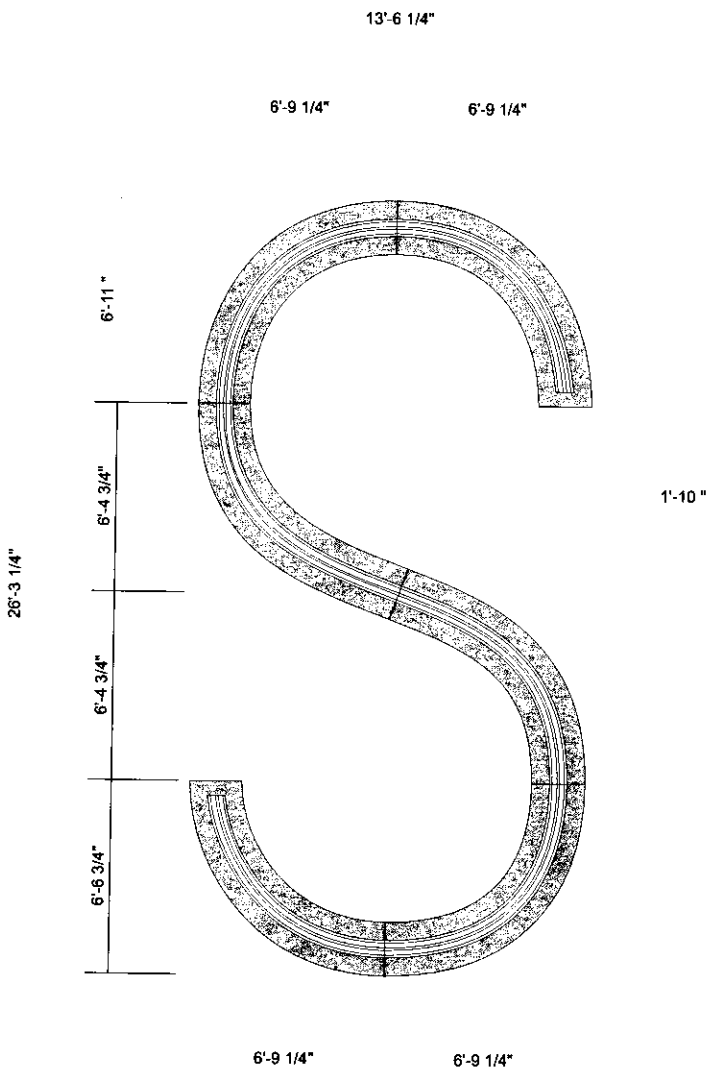

FRONT ELEVATION
SCALE: 1/4" = 1'

2
07-06-15

Note: This sign is intended to be installed in accordance with the requirements of Article 600 of the National Electrical Code and/or other applicable local codes. This includes proper grounding and bonding of the sign.

PHILADELPHIASIGN
BRINGING THE WORLD'S BRANDS TO LIFE

707 West Spring Garden Street
Palmyra, New Jersey 08065

Phone: 856.829.1400
Fax: 856.829.8640
www.philadelphiasign.com

CUSTOMER:
LOEWS

JOB NUMBER:

SIGN TYPE:

LOCATION:
1200 MARKET STREET
PHILADELPHIA, PA 19107

DATE:
1/19/15

DRAWN BY:
PZV

REVISION:

Number:	Date:	By:
2	7/6/15	BJF

SHEET: ENG DEPT
3 OF 6

DWG NUMBER:

ENGINEER SEAL:

MAX DESIGN WIND SPEED 90 MPH
EXPOSURE C

THIS IS AN ORIGINAL, UNPUBLISHED DRAWING CREATED BY PSCA. IT IS SUBMITTED FOR YOUR PERSONAL USE IN CONJUNCTION WITH A PROJECT BEING PLANNED FOR YOU BY PSCA. IT IS NOT TO BE SHOWN TO ANYONE OUTSIDE YOUR ORGANIZATION NOR IS IT TO BE USED, COPIED, REPRODUCED, OR EXHIBITED IN ANY FASHION.

ENGINEERING
SHOP
VINYL / LAYOUT
ROUTING / KNIFE

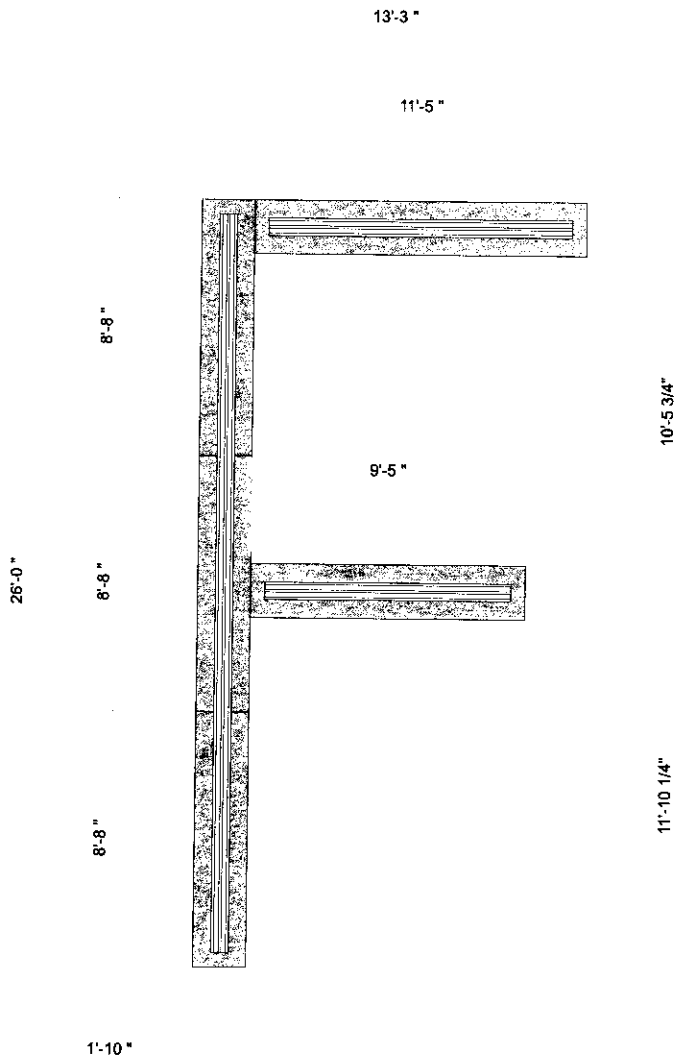

FRONT ELEVATION
SCALE: 1/4" = 1'
2
07-06-15

Note: This sign is intended to be installed in accordance with the requirements of Article 600 of the National Electrical Code and/or other applicable local codes. This includes proper grounding and bonding of the sign.

PHILADELPHIASIGN
BRINGING THE WORLD'S BRANDS TO LIFE
787 West Spring Garden Street
Palmyra, New Jersey 08065
Phone: 856.829.1400
Fax: 856.829.8649
www.philadelphiasign.com

CUSTOMER:
LOEWS

JOB NUMBER:

SIGN TYPE:

LOCATION:
1200 MARKET STREET
PHILADELPHIA, PA 19107

DATE:
1/19/15

DRAWN BY:
PZV

REVISION:

Number:	Date:	By:
2	7/6/15	BJF

SHEET: ENG DEPT
4 OF 6

DWG NUMBER:

ENGINEER SEAL:

MAX DESIGN WIND SPEED 90 MPH
EXPOSURE C

THIS IS AN ORIGINAL UNPUBLISHED DRAWING CREATED BY PSCS. IT IS SUBMITTED FOR YOUR PERSONAL USE IN CONJUNCTION WITH A PROJECT BEING PLANNED FOR YOU BY PSCS. IT IS NOT TO BE SHOWN TO ANYONE OUTSIDE YOUR ORGANIZATION NOR IS IT TO BE USED, COPIED, REPRODUCED, OR EXHIBITED IN ANY FASHION.

ENGINEERING
SHOP
VINYL / LAYOUT
ROUTING / KNIFE

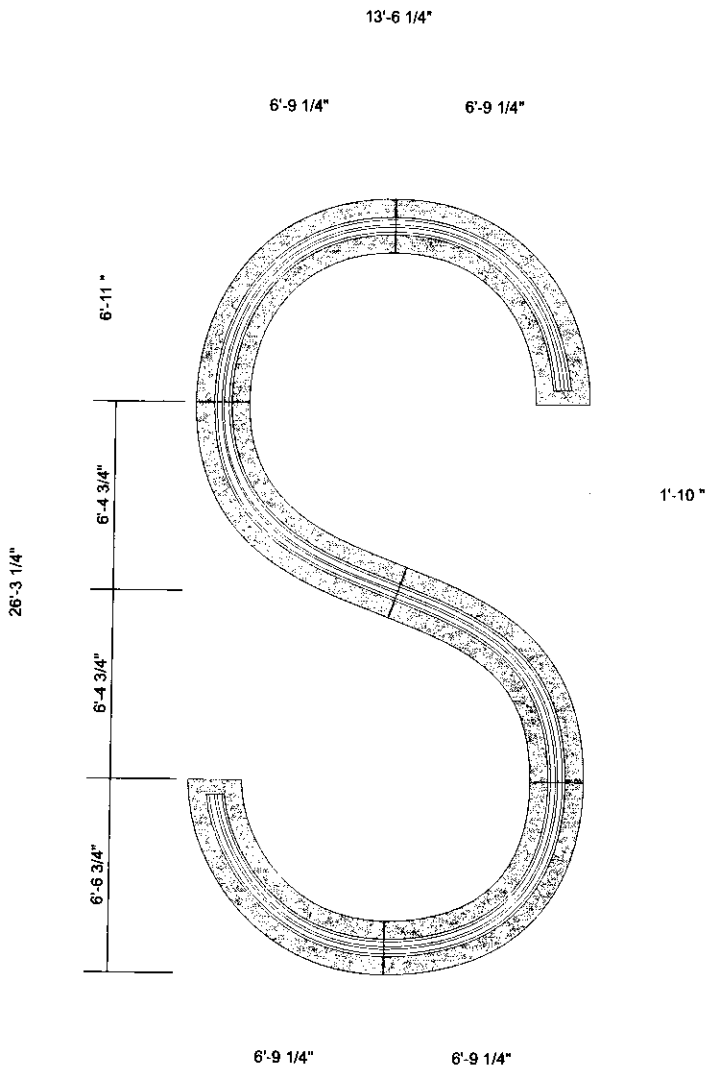

FRONT ELEVATION
SCALE: 1/4" = 1'

2
07-06-15

Note: This sign is intended to be installed in accordance with the requirements of Article 600 of the National Electrical Code and/or other applicable local codes. This includes proper grounding and bonding of the sign.

PHILADELPHIASIGN
BRINGING THE WORLD'S BRANDS TO LIFE

787 West Spring Garden Street
Palmyra, New Jersey 08065

Phone: 856.829.1400
Fax: 856.829.8549
www.philadelphiasign.com

CUSTOMER:
LOEWS

JOB NUMBER:

SIGN TYPE:

LOCATION:
1200 MARKET STREET
PHILADELPHIA, PA 19107

DATE:
1/19/15

DRAWN BY:
PZV

REVISION:

Number:	Date:	By:
2	7/6/15	BJF

SHEET: ENG DEPT
5 OF 6

DWG NUMBER:

ENGINEER SEAL:

MAX DESIGN WIND SPEED 90 MPH
EXPOSURE C

THIS IS AN ORIGINAL, UNPUBLISHED DRAWING CREATED BY PSCS. IT IS SUBMITTED FOR YOUR PERSONAL USE IN CONJUNCTION WITH A PROJECT BEING PLANNED FOR YOU BY PSCS. IT IS NOT TO BE SHOWN TO ANYONE OUTSIDE YOUR ORGANIZATION NOR IS IT TO BE USED, COPIED, REPRODUCED, OR EXHIBITED IN ANY FASHION.

ENGINEERING
SHOP
VINYL / LAYOUT
ROUTING / KNIFE

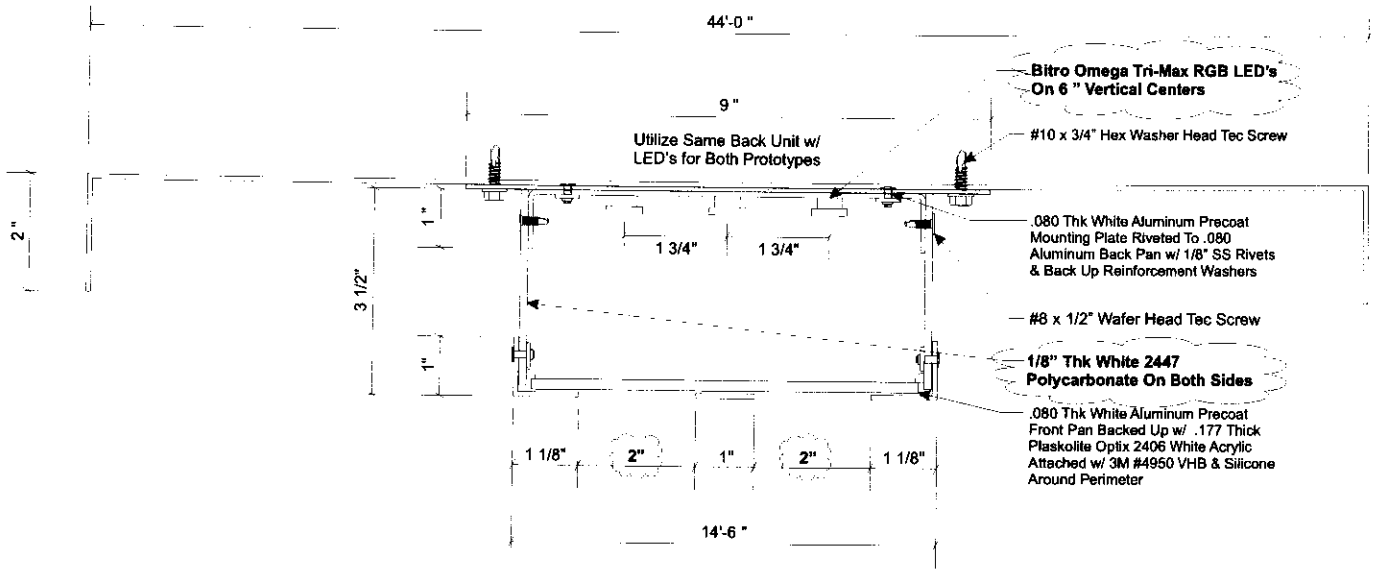

SECTION VIEW
PROTOTYPE 2B
PSFS LED RETROFIT PANELS
Scale: Half Size

2
07-06-15

Note: This sign is intended to be installed in accordance with the requirements of Article 600 of the National Electrical Code and/or other applicable local codes. This includes proper grounding and bonding of the sign.

PHILADELPHIASIGN
BRINGING THE WORLD'S BRANDS TO LIFE

707 West Spring Garden Street
Palmyra, New Jersey 08065

Phone: 856.829.1488
Fax: 856.829.8548
www.philadelphiasign.com

CUSTOMER:
LOEWS

JOB NUMBER:

SIGN TYPE:

LOCATION:
1200 MARKET STREET
PHILADELPHIA, PA 19107

DATE:
1/19/15

DRAWN BY:
PZV

REVISION:

Number:	Date:	By:
2	7/6/15	BJF

SHEET: ENG DEPT
6 OF 6

DWG NUMBER:

ENGINEER SEAL:

MAX DESIGN WIND SPEED 90 MPH
EXPOSURE C

THIS IS AN ORIGINAL UNPUBLISHED DRAWING CREATED BY PSCO. IT IS SUBMITTED FOR YOUR PERSONAL USE IN CONJUNCTION WITH A PROJECT BEING PLANNED FOR YOU BY PSCO. IT IS NOT TO BE SHOWN TO ANYONE OUTSIDE YOUR ORGANIZATION NOR IS IT TO BE USED, COPIED, REPRODUCED, OR EXHIBITED IN ANY FASHION.