# CROSS CONNECTION CONTROL MANUAL

## WATER DEPARTMENT

### STANDARD SPECIFICATIONS

### for

### PREVENTION OF WATER CONTAMINATION

# CITY OF PHILADELPHIA
# WATER DEPARTMENT

# CROSS-CONNECTION
# CONTROL MANUAL

*Cross Connection Control Guidelines- Issued 1978*
*Cross Connection Control Manual, 1st Edition - Issued 1988*
*Cross Connection Control Manual, 2nd Edition- Issued 1992*
*Cross Connection Control Manual, 3rd Edition - Issued 1994*
*Cross Connection Control Manual, 4th Edition - Issued 1998*
*Cross Connection Control Manual, 5th Edition - Issued 2004*
*Cross Connection Control Manual, 6th Edition - Issued 2006*

## DIRECTORY

### ***WATER DEPARTMENT***

Cross-connection control requirements on
Containment:

Attn: Cross-connection Control Section
Bureau of Laboratory Services
1500 E. Hunting Park Avenue
Philadelphia, PA 19124-4941
(215) 685-1419, 1420 and 1407
Fax: (215) 743-5594

**Water Main Records**
ARA Tower, 2nd Floor
1101 Market Street
Philadelphia, PA 19107
(215) 685-6276 or 685-6300
Fax: (215) 685-6312

**Meter Shop**
29th & Cambria Streets
Philadelphia, PA 19132
(215) 685-9619 or 685-6300
Fax: (215) 685-9649

### ***LICENSES & INSPECTIONS***

Permits for domestic services & fire connections:

**Regarding Domestic Systems:**
Plumbing Unit
Municipal Services Building
1401 JFK Blvd
Philadelphia, PA 19102
(215) 686-2450, 2451
Fax: (215) 686-1407

**Regarding Fire Protection Systems:**
Engineering Services
Municipal Services Building
1401 JFK Blvd
Philadelphia, PA 19102
(215) 686-2470 and 2472
Fax: (215) 686-2598

### ***DEPARTMENT OF PUBLIC HEALTH***

Cross-connection control requirements on
Elimination:

Environmental Health Services
321 University Avenue
Philadelphia, PA 19104
(215) 685-7343, 7344, 7488
Fax: (215) 382-1210

## TABLE OF CONTENTS


| CHAPTER | | TITLE | PAGE |
|---|---|---|---|
| | | **GLOSSARY** | |
| | | *Definitions for Commonly used Cross Connections Terms* | 1 |
| **1.0** | | **INTRODUCTION** | 4 |
| | 1.1 | *Purpose of Manual* | 4 |
| | 1.2 | *Cross Connection Control in the City of Philadelphia* | 4 |
| **2.0** | | **POLICY** | 5 |
| **3.0** | | **AUTHORITY** | 6 |
| | 3.1 | *The Commonwealth of Pennsylvania* | 6 |
| | 3.2 | *The Philadelphia Water Department* | 6 |
| **4.0** | | **CONTAINMENT REQUIREMENTS** | 8 |
| | 4.1 | *Backflow Protection at the Service Connection for Containment* | 8 |
| | 4.2 | *Listing of Facilities in which Backflow Protection is Required at the Domestic Service* | 9 |
| | 4.3 | *Backflow Protection for Fire Protection Systems* | 12 |
| **5.0** | | **APPROVED BACKFLOW PREVENTION ASSEMBLIES** | 13 |
| **6.0** | | **AIR GAP SEPARATION USING RECEIVING TANKS** | 14 |
| **7.0** | | **INSTALLATION REQUIREMENTS** | 15 |
| | 7.1 | *Mechanical Backflow Prevention Assemblies* | 15 |
| **8.0** | | **TESTING AND MAINTENANCE** | 18 |
| | 8.1 | *Backflow Prevention Assembly Testing* | 18 |
| | 8.2 | *City Certified Backflow Technicians Responsibilities* | 18 |
| | 8.3 | *Backflow Prevention Assembly Testing Procedures* | 20 |
| **9.0** | | **APPENDIX** | 23 |

# GLOSSARY

## DEFINITIONS FOR COMMONLY USED CROSS CONNECTION TERMS

### *Air-Gap Separation*

Unobstructed physical separations between the free-flowing discharge end of a potable supply pipeline and an open or non-pressurized receiving vessel. The distance between the bottom of the feed line and top rim of the vessel (vertically measured) shall be at least double the diameter (2xD) of the supply pipe. In no case shall the air-gap be less than one (1) inch.

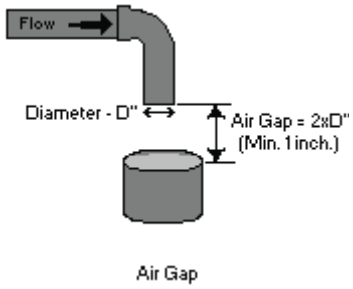

Air Gap

### *Atmospheric Vacuum Breaker (AVB)*

The AVB is typically used in the supply lines to slop sinks. This assembly contains a float-check, a check seat and an air inlet port. The flow of water into the body causes the float to close the air inlet port. When the flow of water stops, the float falls and forms a check valve against backsiphonage and at the same time opens the air inlet port to allow air to enter and satisfy the vacuum. An AVB is designed to protect against backsiphonage conditions only. Therefore, an AVB shall not be used for containment backflow protection.

### *Auxiliary Water Supply (System)*

Any water supply that does not contain City drinking water or is deemed to be non-potable. Auxiliary systems can be divided into three categories:

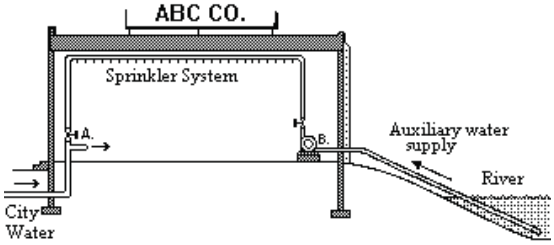


- A water system in which City water is stored, transmitted or utilized for other than a potable purpose (e.g., a high pressure fire system, an industrial process, a fire sprinkler system, cooling towers or swimming pools) and is open to contamination or deterioration, thus making it non-potable.

- A water system in which City water is further treated with chemicals or by other means.

- A water system in which water is derived from natural sources such as a well, river or pond.

### *Backflow*

The flow of water or other liquids, mixtures, gases, or other undesirable substances through a cross connection into the distribution pipes of a potable water supply from any source(s) other than its intended source. Backflow usually occur under two hydraulic conditions: (1) back pressure or (2) a reduced or negative supply pressure below atmospheric pressure (backsiphonage).

***Backpressure***

Elevated pressure in the downstream piping system caused by pumping, elevation head, steam pressure or air pressure that exceeds the pressure in the supply piping.

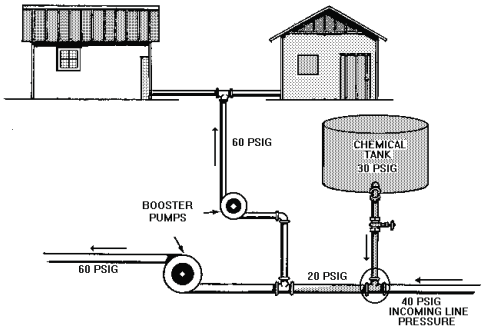


***Backsiphonage***

Is the flowing back of non-potable water from a plumbing fixture or vessel into the drinking water supply due to a negative pressure within the connected drinking water supply system.

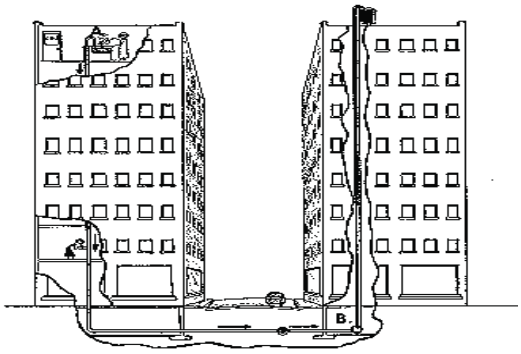

***City Certified Backflow Prevention Technician***

A City-licensed tradesman who is **certified** for installation, servicing and testing of backflow prevention devices. (See section 8.2)

***Containment***

A strategic approach of applying backflow protection on the service line to a facility, wherein contaminated water is **contained within the facility** and prevented from affecting other services connected to the same City water main.

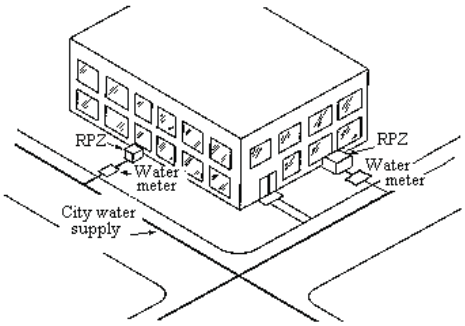


***Contamination***

This is an impairment of potable water by the introduction or admission of any foreign substance that degrades the water quality and has the potential to create a health hazard.

***Cross Connection***

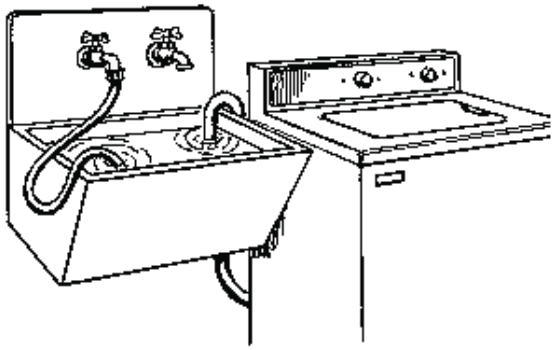

Any physical connection or arrangement of pipes that allows the conveyances between potable and non-potable or questionable water source. Water may flow from one system to the other such that the potable water may become contaminated by the questionable source. Hose connections, bypass arrangements, jumper connections, removal sections, or changeover assemblies or any other temporary or permanent connecting arrangements through which backflow may occur are considered to be cross connections. The direction of flow depends on the pressure differential between the two systems.

***Double Check Valve Assembly (DCV)***

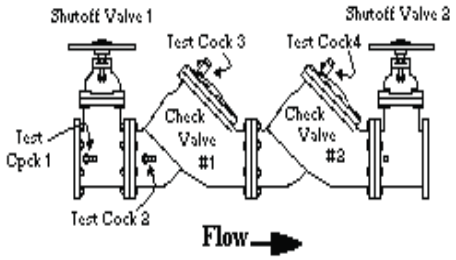


One of the type of backflow prevention assemblies which is composed of two independently acting check valves along with tightly closing shutoff valves attached at each end of the device and fitted with test cocks. A DCV assembly is used against backpressure and backsiphonage. In general, a double check valve assembly installation is used in minimum hazard systems. See list of **Approved Double Check Valve Assemblies.**

***Pressure Vacuum Breaker (PVB)***

This assembly contains an independently operating, internally loaded check valve and an independently operating, loaded air inlet valve located on the discharge side of the check valve. This assembly is equipped with test cocks and shutoff valves attached at each end of the assembly. This assembly is designed to protect against backsiphonage only. PVB assembly shall not be used for containment backflow protection.

***Reduced Pressure Zone Assembly (RPZ)***

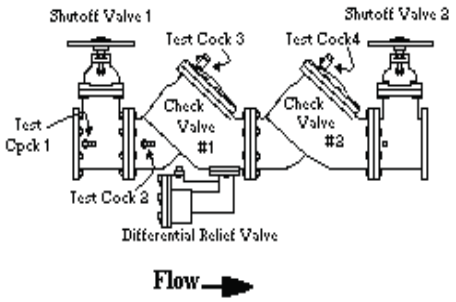


A type of backflow prevention assembly, which contains two independently acting check valves together with a hydraulically operated, mechanically independent, pressure differential relief zone located between the check valves. The assembly includes test cocks and a tightly closing shutoff valve at each end. This assembly is effective against backflow caused by backpressure and backsiphonage. A reduced pressure valve assembly installation is used in high hazard systems. See list of **Approved Reduced Pressure Zone Assemblies**.

## 1.0 INTRODUCTION

### *1.1 Purpose of Manual*

This manual describes the Water Department's policy and the responsibility of each water customer pertaining to cross connection control. General and detailed information is presented in order to provide clear guidance for complying with the Department's cross connection control policy.

### *1.2 Cross Connection Control in the City of Philadelphia*

The City's Departments of Water, Licenses & Inspections and Public Health recognize that measures providing for reliable water treatment and conveyance do not necessarily guarantee safe water at the customer's tap because cross connections can exist. There have been numerous reported cases around the country where backflow through cross connections has been responsible for the contamination of a potable supply with disease-causing agents, toxic chemicals and other hazardous substances.

In order to prevent contamination resulting from backflow, the Departments of Water, Licenses & Inspections and Public Health share responsibilities for cross connection control. Operational jurisdictions have traditionally been divided into two functional areas: containment and elimination.

**Containment**, which is the concern of the Water Department and this manual, is designed to prevent any contamination on the customer's premises from affecting other customers through the City's water supply. In effect, contamination is "contained" within a facility and prevented from reaching the City main. **Elimination** of all unprotected cross connections within a facility, for the protection of that and other facilities, is the concern of the Department of Public Health. The Department of Licenses and Inspections administers both policies during the permitting and inspection processes. The Department of Water and Public Health also conduct inspections.

## 2.0 POLICY

The Water Department is responsible for providing safe water to every customer at the service connection. In the exercise of this responsibility, the Department must take precautionary measures to protect the City's water distribution system from hazards originating on the premises of its customers which may degrade the community's water. These measures are borne out in the following policies:

***2.1*** All facilities shall have either an approved air-gap separation or an approved backflow prevention device consistent with the degree of hazard, as defined by the Department, at the service connections. The backflow protection (in reference to **Containment**) shall be a properly installed air-gap separation, a double check valve assembly, or a reduced pressure zone assembly.

In addition, **all fire systems** shall have a Water Department approved reduced pressure zone assembly or an approved double check valve assembly at the lines leading to the fire systems (Reference - Chapter 4, Containment Requirements).

***2.2*** The Department requires that the **customer** shall regularly provide for the testing and maintenance of backflow devices by a **certified backflow prevention technician** at least once a year, in order to maintain them in operating condition or whenever failure is suspected. The customer shall also provide, through a **certified backflow prevention technician,** for the overhaul or replacement of such devices if they are found defective. The customer shall submit records of such tests, repairs, overhauls and replacements. to the Water Department's Cross Connection Control Section. Property owners shall be responsible for keeping records of such tests and related maintenance for a period of at least three (3) years.

***2.3*** Non-compliance with the preceding requirements after due notification may result in the discontinuation of the water service. The customer may be required to reimburse the Department for all costs associated with such action. The Department may immediately terminate the water service to a facility if it is determined that a serious contamination potential exists.

## 3.0 AUTHORITY

### *3.1 The Commonwealth of Pennsylvania*

In the revised (October 23, 1984) Rules and Regulations of the Department of Environmental Protection, Section 109.709, it is stated:

a. No person shall introduce contaminants into a public water supply through a service connection of a public water system.

(1) It shall be the responsibility of the customer to eliminate cross-connections or provide backflow devices to prevent contamination of the distribution system from both backsiphonage and backpressure. Individual backflow preventers shall be acceptable to the public water supplier.

(2) If the customer fails to comply with paragraph (1) within a reasonable period, the water supplier shall discontinue service after reasonable notice has been made to the customer.

b. At the direction of the Department, the public water supplier shall develop and implement a comprehensive control program for the elimination of existing cross-connections or the effective containment of sources of contamination, and prevention of future cross-connections.

### *3.2 The Philadelphia Water Department*

In the Philadelphia Water Department Regulations Section 403, (previously known as Regulation No. 77), it is stated:

#### 3.2.1 Backflow protection at connections to the City water mains

In order to protect the public water supply from potential cross connection and backflow hazards, any connection to the City main, including both domestic and fire service connections within the property, shall be provided with adequate backflow protection by the property owner or the water user.

The requirements of this regulation shall generally apply to all water-using structures and systems, regardless of their sizes, plumbing types and water usage patterns with the exception of single family residences and multi-family buildings with four (4) units or fewer. Where the Water Department has determined that backflow prevention measures are needed at any specific single family residence or multi-family building with four (4) units or fewer, this regulation shall also apply to those buildings. Backflow prevention measures include, but are not limited to, the following requirements:

(1) Any domestic and fire protection service line, including each line of a multiple service line to any property, shall be equipped with an approved backflow prevention device or an approved air-gap separation on each line. Backflow prevention devices or air-gap separations must be installed where designated by the Water Department at the sole expense of the property owner. Backflow prevention devices or air-gap separations must be from an approved Water Department list or otherwise approved by the Water Department. Installers must refer to the latest edition of the **Water Department Cross Connection Control Manual** for installation requirements and listings of approved backflow prevention devices. This manual is available upon request from the Departments of Water and Licenses and Inspections.

(2) All other connections to the City main, including standpipes leading to elevated tanks, temporary ferrules and hose connections shall be equipped with approved backflow prevention devices.

(3) Only persons certified by the City's designated certification organizations shall install, test and service backflow prevention devices. Installers are subject to all requirements of the Philadelphia City Code and regulations of the Water Department and the Department of Licenses and Inspections.

(4) Any newly installed backflow prevention device shall be tested prior to the initiation of service. Backflow prevention devices shall thereafter be tested at least once a year or whenever failure is suspected. Backflow prevention devices must be maintained in proper operating condition at all times. The property owner shall be responsible for arranging for testing and for all costs of testing and related maintenance. Test results shall be submitted to the Water Department's Bureau of Laboratory Services. Property owners shall be responsible for keeping records of such tests and related maintenance for a period of three (3) years.

(5) The Water Department may shut off the water service to any premise and at any connection, if it determines that there is inadequate backflow protection at the service connection and/or any connection to the main.

Note: In this manual hereafter, the term “backflow prevention assembly” will be used, which refers to the backflow prevention device and its strainer(s) as a unit.

## 4.0 CONTAINMENT REQUIREMENTS

This chapter describes the Water Department's cross connection control requirements for all newly constructed and existing facilities.

### *4.1 Backflow Protection at the Domestic Service Connection for Containment*

**4.1.1** In order to protect the City's water supply from contamination that originates within a customer's water system, an approved backflow prevention assembly (Refer to City Approved Backflow Assembly Listing) consistent with the degree of hazard or an approved air-gap separation (Refer to Section 6.0) shall be installed by the owner at the service connection on the outlet side of the meter at the owner's expense.

**4.1.2** The **degree of hazard** is the Water Department's assessment of the potential harm that may result from potential cross connections within a water-using facility.

**4.1.3** **High hazard** denotes a potential threat of a cross connection problem that is physical, chemical or biologically hazardous in nature. These pose a danger to the health and safety of the customer or the public.

**4.1.4** **Low hazard** denotes a potential threat to the potability or physical properties of a potable water system which could cause aesthetic problems or have a detrimental effect but which would not constitute a hazard to the health of the customer or the general public as defined.

**4.1.5** A facility that has **a high hazard potential** or exhibits **a high potential for the occurrence of backflow** shall have an approved reduced pressure zone assembly or an approved air gap separation, which conforms to the City's cross connection requirements.

**4.1.6** A facility that has **a low hazard potential** shall have an approved double check valve assembly which conforms to the City's cross connection requirements.

**4.1.7** In order to provide guidance for designers of plumbing systems, the Water Department has developed a list of systems, plants and buildings for which the backflow prevention requirements have been predetermined (see Section 4.2) based upon the degree of hazard and potential for the occurrence of backflow. For cases which are not listed or where there are questions about installation requirements, the Department will, provide a preliminary opinion on the specific containment requirements.

**4.1.8** The customer shall provide for the regular testing of such backflow prevention devices or air-gap separations at least once a year, or whenever failure is suspected, by a **certified backflow prevention technician** in order to maintain them in an operating condition. The customer shall also provide for the overhaul or replacement of such devices or air-gap separations by a **certified backflow prevention technician** if they are found defective. A record of such tests, repairs, overhauls and replacements shall be kept by the customer for a period of at least three (3) years and be submitted to the Water Department's Cross Connection Control Section. (See Chapter 8.0)

### *4.2 Listing of Facilities in which Backflow Protection is required at the Domestic Service*

**4.2.1** The requirements for backflow protection at the service connection, for each of the plants, systems or buildings listed in Table 1 below, are based on the degree of hazard and potential for the occurrence of backflow. Every service line to the listed property shall be equipped with an approved backflow prevention assembly or an approved air-gap separation.

**4.2.2** Single residences and multi-family buildings with four (4) units or fewer that maintain a potential cross connection (e.g. a built-in lawn sprinkler system, swimming pool or private well) shall have an approved reduced pressure zone assembly installed by a certified technician.

**4.2.3** For facilities other than those listed in Table 1, consult the Water Department for specific requirements.

**4.2.4** The most serious potential hazard will determine the type of protection required in the case of facilities with multipurpose usage.

**4.2.5** If the system is connected to a line or water system that is beyond the meter connection (i.e. a branch line off the domestic service line), backflow protection requirements come under the jurisdiction of the L&I and Department of Public Health. In general, a double check valve installation is a minimum requirement.

**4.2.6** **Listing of Facilities** - Table 1. on page 10, contains a list of plants or facilities where backflow protection is required at the service connection. The table identifies the required mechanical backflow assemblies to be used.

**LEGEND:**

[1] Reduced Pressure Zone Assembly

[2] Double Check Valve Assembly

[3] Five units or more with a common water service line

[4] Examples of Systems with high hazard potential for the occurrence of backflow:

- Sump systems, sewer ejecting or sewer connected systems, sewage pumping, swimming pool, well, chilled-water, air conditioning systems equipped with cooling tower and circulation units, steam generation, boiler, built-in lawn sprinklers, heat exchanger or water treatment units (e.g. water softener). High-rise building (e.g., four floors or more), booster pump, hydraulically operated equipment, water storage tank, multi-purpose building (e.g. mall).

| TABLE 1. LISTING OF FACILITIES | | DEVICE TYPE | |
|---|---|---|---|
| **No** | **A. Plant or System** | **RPZ[1]** | **DCV[2]** |
| 1 | Aircraft and Missile Plant | x | |
| 2 | Automatic Car Wash | x | |
| 3 | Automotive Plant | x | |
| 4 | Auxiliary Water system | x | |
| 5 | Beverage Bottling Plant | x | |
| 6 | Brewery/Distillery | x | |
| 7 | Cannery, Packing House and Reduction Plant | x | |
| 8 | Chemical Plant(Manufacturing, Processing, Compounding, or Treatment | x | |
| 9 | Dairy and Cold Storage Plant | x | |
| 10 | Dye Handling or Processing | x | |
| 11 | Film Processing | x | |
| 12 | Irrigation System (Green House, Park, Golf Course, Playground, Estate, Cemetery etc.) | x | |
| 13 | Laboratory | x | |
| 14 | Laundry A. Commercial B. Laundromat | x | |
| 15 | Manufacturing, Processing, and Fabrication Plant | x | |
| 17 | Metal Plating Plant | x | |
| 18 | Public Transportation Facility (Airport, Bus or Train Station, etc.) | x | |
| 19 | Pulp and Paper Products Plant | x | |
| 20 | Petroleum or Gas Processing or Storage Plant | x | |
| 21 | Plating Plant | x | |
| 22 | Power Plant (Heating/Ventilation/Refrigeration or Commercial Power) | x | |
| 23 | Radioactive Materials or Substances | x | |
| 24 | Rubber Plant (Natural or Synthetic, Processing Plant or Facility Handling, Mfg. Rubber Goods or Tires) | x | |
| 25 | Sand and Gravel Plant (Sand and Gravel Washing or Cement or Concrete Processing) | x | |
| 26 | Sewage or Stormwater Treatment/ Wastewater Processing/Ejector Pumping or Handling Survey Facility | x | |
| 27 | Water Front Facility & Industry | x | |
| 28 | Facility where a Cross Connection is to be Maintained | x | |
| 29 | Facility where security requirements or Other Prohibiting restrictions make it impossible to complete a CCC survey | x | |
| | **B. Building** | | |
| 30 | Apartment Complex[3] with a Low Hazard Potential for the Occurrence of Backflow | | x |
| 31 | Apartment Complex with a High Hazard Potential for the Occurrence of Backflow[4] | x | |
| 32 | Commercial Buildings including Warehouses | x | |
| 33 | Food Handling Establishments including Restaurants | x | |
| 34 | Laboratory | x | |
| 35 | Medical Facilities including Hospitals, Clinics, Nursing Homes and Dialysis Units | x | |
| 36 | Morgue and Mortuary | x | |
| 37 | Motel and Hotel | x | |
| 38 | Multi-Purpose Building | x | |
| 39 | Office Building with a Low Hazard Potential for the Occurrence of Backflow | | x |
| 40 | Office Building with a High Hazard Potential for the Occurrence of Backflow[4] | x | |
| 41 | Public Building (Federal/State/City/Government) with a Low Hazard Potential for the Occurrence of Backflow | | x |
| 42 | Public Building with a High Hazard Potential for the Occurrence of Backflow[4] | x | |
| 43 | Religious buildings (Church, Temple) with a Low Hazard Potential for the Occurrence of Backflow | | x |
| 44 | School, Colleges | x | |
| 45 | Supermarket | x | |
| | **C. Private Mains (See Appendix)** | | |
| 46 | Apartment Complex[3] with a Low Hazard Potential for the Occurrence of Backflow | | x |
| 47 | Apartment Complex with a High Hazard Potential for the Occurrence of Backflow[4] | x | |
| 48 | Commercial Building Complex | x | |
| 49 | Industrial, Office & Public Facilities(Federal/State/City/Quasi-Government) | x | |
| 50 | Multi-Purpose | x | |
| | **D. Fire System Description** | | |
| 51 | Fire system directly connected to City main | | x |
| 52 | Fire system with various chemical additives and/or auxiliary sources | x | |
| 53 | Fire connection on a metered domestic service | | x |
| 54 | Fire connection on a metered domestic service with various chemical additives and/or auxiliary sources | x | |

### *4.3 Backflow Protection for Fire Protection Systems*

**4.3.1** **Any fire sprinkler** system, which is directly connected to the City main, shall be equipped with an approved double check valve (DCV) at the line leading to the sprinkler system.

**4.3.2** An approved reduced pressure zone assembly (RPZ) will be required for sprinkler systems that constitute a significant backflow hazard or systems with a high potential for the occurrence of backflow. These include:

- Sprinkler systems which use foaming substances, antifreeze solutions or biostatic or chemical additives;

- Facilities which have auxiliary water sources (see Glossary) suitable for fire fighting systems which are connected or available to the sprinkler systems.

- (Note: Facilities in which the fire Siamese connection is within 700 feet of a non potable standing water source such as a pond, creek or river, must consult the Water Department regarding appropriate backflow protection.)

**4.3.3** All new underground piping and lead-in connections on the inlet side of the listed backflow prevention device shall be cement lined ductile iron or copper pipe. Piping for the fire suppression system on the outlet side of the listed backflow prevention device may be of any material permitted by the appropriate installation standard referenced by the *2004 Philadelphia Building Code.*

(Note: Consult the Fire Department for the usage of antifreeze or other chemical additives in wet systems and unheated rooms.)

## 5.0 APPROVED BACKFLOW PREVENTION ASSEMBLIES

All backflow prevention assemblies must be selected from the City's approved listing of Reduced Pressure Zone (RPZ), Double Check Valve (DCV), Reduced Pressure Zone Detector (RPZD) and Double Check Valve Detector (DCVD) assemblies. This list is updated periodically with the modification, addition or deletion of backflow prevention assemblies. The approval process for these assemblies is based on the standards of USC and other nationally recognized agencies. The current approved list is an appendix separate from this manual, and can be obtained from the Water Department's Cross Connection Control unit or its web page.

## 6.0 AIR-GAP SEPARATION USING RECEIVING TANKS

**6.0.1** The receiving tank shall be installed within the building and close to the service connection (meter). The supply line between the meter and the tank shall be permanently exposed for inspection purposes. A facility with an air-gapped system which is located away from the service connection (e.g. a holding tank on the roof) must provide containment protection at the service connection.

**6.0.2** There shall be no outlet, tee, tap or connection of any kind to or from the supply pipe between the meter and the opening from which the water is discharged into the receiving tank.

**6.0.3** The free flowing discharge point shall be located at a distance of not less than two times the diameter of the inlet pipe (minimum one inch) above the flood rim of the tank.

## 7.0 INSTALLATION REQUIREMENTS

Drawings in the appendix illustrate the installation design standards for air-gap separation, mechanical devices and the water metering requirements. The same or similar methods as shown should be used and a City certified backflow prevention technician MUST do all work**.**

**7.0.1** Prior to the installation of any backflow prevention assembly, the technician must apply for a permit and submit drawings to L&I offices for approval. Any variances from typical installations must obtain approval from the Cross Connection Control section of the Philadelphia Water Department.

**7.0.2** Prior to the installation of any containment backflow prevention assembly, the technician may need to caution the owners of certain facilities that the installation of a backflow prevention assembly may create a closed system, thereby creating the potential for thermal expansion pressure build-up.

**7.0.3** Prior to installation, backflow prevention assemblies **must** be selected from the current City-approved listing maintained by the Water Department. If any unapproved backflow prevention assembly is found on any water service connection, that assembly shall be removed and replaced with a City approved assembly.

**7.0.4** Prior to installation, the water line shall be thoroughly flushed to expel all debris. Especially with the RPZ assembly, debris lodging under one of the check valves is one of the most common causes of malfunctioning assemblies.

**7.0.5** No backflow prevention assembly shall be installed creating a safety hazard (i.e. installed over an electrical panel, steam lines, boilers, or within a ceiling).

### *7.1 Mechanical Backflow Prevention Assemblies*

All backflow prevention assemblies shall be installed in a **HORIZONTAL ORIENTATION**, unless stated otherwise in the City's latest approved listing, and in accordance with the manufacturer's specifications and the following Water Department instructions:

**7.1.1** The backflow unit shall be maintained as an assembly. The backflow assembly shall be equipped with proper shutoff valves, *attached to the device*, for maintenance and testing. Shutoff valves shall be the type that are supplied by the same backflow preventer manufacturer or the type that are approved or manufactured to conform to standards set by AWWA, USC, FCCC, ASSE, or UL/FM. Approved assemblies should be shipped from the manufacturer with shutoff valves and test cocks. The assembly shall not be approved without proper shutoff valves and test cocks.

**7.1.2** There shall be no outlet, tee, tap or connection of any kind to or from the supply pipe between the meter or connection to the main when the meter is not present, and the backflow prevention assembly. If a takeoff is necessary, it must be equipped with the **proper PWD approved backflow prevention assembly.**

**7.1.3** An approved backflow prevention assembly when installed within the building on the service connection shall be located after but close to the meter. If a backflow prevention assembly is required to be installed outdoors, for domestic systems, the device must be installed within 100 ft of the meter. The assembly shall be protected from freezing, flooding and vandalism. Access for routine testing and maintenance shall be provided.

**7.1.4** For existing fire systems, the backflow prevention assembly must be as close to the point of entry of the service as possible. In addition, the pipe run to the backflow prevention assembly from the water main shall be less than 100 ft. For new fire systems the backflow prevention assembly must be located as close to the water main as possible.

**7.1.5** In some facilities, backflow prevention assemblies installed in parallel on a service line may be necessary to meet the needs of the facility:

**1)** If a facility requires continuous uninterrupted service and it is not possible or practical to provide water service from two separate service lines into the premises, provisions must be made for the installation of two backflow prevention assemblies in parallel.

**2)** Installing parallel assemblies may be required when the water service line to be protected is greater than 10" in diameter.

**3)** If a parallel or by-pass installation is desired, both lines shall be equipped with two same-type backflow prevention assemblies. The combined hydraulic capacity of the parallel lines/devices shall be equal to or greater than that of the line that is being subdivided. Closed gate valves on the bypass do not constitute protection.

**7.1.6** When a backflow prevention assembly is located inside a building, there must be a suitable means of addressing any discharge without creating a safety or nuisance problem. If an RPZ assembly is to be installed, considerable measures must be taken to provide drainage for the relief-valve port. An RPZ assembly will spill or discharge water under some normal and most abnormal operating conditions. There must be a fixed air gap between the relief port and the drain.

**7.1.7** Where siting problems prevent installation, as specified in Sections 7.1.2 - 7.1.6, the Departments of Water and/or Licenses & Inspections may approve an alternate installation provided that a written request is presented to the Water Department or L&I. All alternative installations must provide at least the same level of backflow protection as the standard installation.

**7.1.8** The requirements for installation of backflow prevention assemblies at alternative locations, in lieu of the service connection within a building, are given below.

**7.1.9** ***Beyond the Service Connection***

**1) Indoor Installations**

(a) An approved backflow prevention assembly may be installed on the discharge side of a pump system when a customer's water-pump system experiences or could experience operational problems due to low City-water pressures in the area surrounding the building.

(b) There shall be no outlet, tee, tap or connection of any kind to or from the supply line between the meter and the assembly. In situations where a meter is not required, there shall not be any between the assembly and the connection to the water main. If a takeoff is necessary, it must be equipped with a **proper backflow prevention assembly designated by the Water Department.**

**2) Outdoor Installations**

***(a) RPZ Installation***

An RPZ must be installed above ground with a minimum 12" clearance (the distance between the ground level and the bottom of the assembly) so that it will not become submerged and can drain freely from the atmospheric port. An on-site constructed or pre-manufactured shelter must be installed to provide additional protection against freezing and vandalism.

***(b) DCV Installation***

Preferably, all DCVs should be installed above ground. However, if a DCV needs to be installed below ground level it must be located in a pit (vault) or chamber that is designed to prevent flooding. If the installation is made in a meter (master) pit, the designer shall follow the Water Department's Meter Pit Standards. (See Appendix, Meter Installation Standards)

All backflow prevention assembly installations in pits or chambers must adhere to the following provisions:

(i) There shall be no outlet, tee, tap or connection of any kind to or from the supply line between the meter and the backflow prevention assembly. In situations where a meter is not required, there shall not be any between the assembly and the connection to the water main.

(ii) The assembly shall be protected against freezing. Access for routine testing and maintenance shall be provided.

(iii) If a drain in the pit or chamber is absolutely necessary there shall be no connection between the drain and a sewer or appurtenance that permits the passage of polluted water into the pit or chamber.

(iv) The pit shall be maintained free of standing water so the DCV is not submerged.

## 8.0 TESTING AND MAINTENANCE

### *8.1 Backflow Prevention Assembly Testing*

All containment backflow prevention assemblies shall be tested and maintained to insure continued reliability. Tests shall be made within fourteen (14) working days of initial installation, after each repair and annually thereafter. Refer to Philadelphia Water Department Regulations mentioned on page 6. All reports on the testing of each assembly giving pertinent test data and repairs (if any) that were made, are to be documented using the Water Department's form No. 79-770 **"Backflow Prevention Assembly Test and Maintenance Record."** All assemblies failing to meet the Water Department's performance standards (Refer to Testing Procedures, Section 8.3 on page 20) shall be repaired or replaced and retested promptly. All repairs and replacements must be completed within fourteen (14) days from the initial test. Assemblies, which are found to have a history of not meeting the Water Department's performance standards, should be placed on a semi-annual or quarterly testing schedule.

City certified backflow prevention assembly technicians shall perform Backflow prevention testing and maintenance**.** These certified individuals are trained and competent in this specialized area. An updated listing of the City certified technicians is made available at the Water Department and L&I offices listed in the DIRECTORY, and also will be available on the Water Department web page.

All backflow assembly test kits used to test backflow prevention assemblies should be calibrated on a yearly basis. The calibration results of test kits should be recorded and submitted to the Water Department's Cross Connection Control Section at the address listed in the DIRECTORY.

### *8.2 City Certified Backflow Technician*

To become a City certified backflow technician, the applicant must successfully complete the four day Backflow Prevention Assembly Technician Training and Certification Course offered in Philadelphia by the New England Water Works Association (NEWWA) or the American Society of Sanitary Engineering (ASSE) and must register with PWD. To qualify for the City approved backflow prevention technicians listing, the PWD Certified Backflow Assembly Technician Registration Form (CR100) must be filled out and submitted to PWD. **Certification shall be renewed every three years**.

**8.2.1** ***All cross connection control (CCC) work for domestic service systems must be performed by a certified backflow technician employed as either a City licensed Registered Master Plumber (RMP) or a City licensed Journeyman Plumber.*** Journeyman Plumbers must work under the supervision of an RMP who is a **certified backflow technician**. After testing of a containment assembly the results must be signed by a **certified RMP** and sent to the Water Department**.**

**8.2.2** All CCC work for fire suppression systems must be performed by a **certified backflow technician** employed by a City licensed **fire suppression contractor (FSC)**. The backflow technician is required to possess a Department of Licenses & Inspections **Class 1-fire suppression systems certificate**. After testing of a containment assembly the results must be signed by a **certified FSC** and sent to the Water Department**.**

**8.2.3** The City certified backflow technician has the following responsibilities when employed by a customer to install, test, repair or maintain any backflow prevention assembly:

- Consult with either the Water Department or L&I offices for approval prior to the installation of any backflow prevention assembly.

- Ensure that the City's testing procedures are used for testing, repairing and maintaining any backflow prevention assembly (Refer to Section 8.3, Approved Testing Procedures).

- Provide copies of reports of such testing and/or repair for the customer on form #79-770 - *Backflow Prevention Assembly Test and Maintenance Record*. The certified technician must include the list of any materials or replacement parts used to repair an assembly.

- Replacement parts must be equal in quality to the parts originally supplied by the manufacturer of that assembly.

### *8.3 Backflow Prevention Assembly Testing Procedures*

The following procedures **SHALL** be used when testing backflow prevention devices:

#### *8.3.1 Test procedure for RPZ assemblies*

**1.** Close No. 2 gate valve on device and observe relief valve for discharge of water. (Discharge would indicate the first check valve is not holding.)

**2.** Flush test cocks to remove rust, debris, etc.

**3.** Close valve "A" (high) and valve "C" (low) on test kit. Valve "B" (vent) should be open.

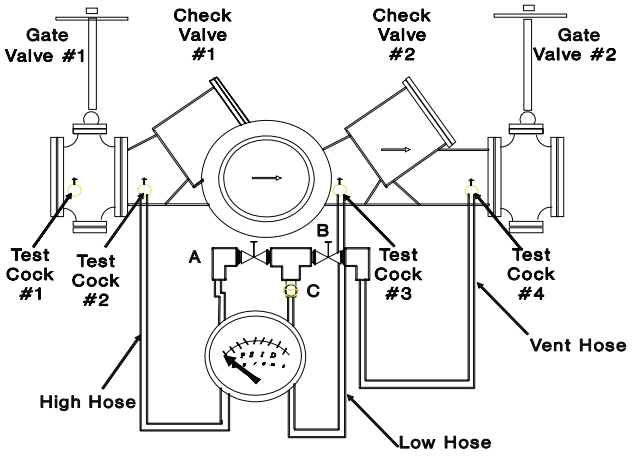


**a) Test first check valve for minimum 5 PSI static pressure drop:**

**1.** Connect high-pressure hose to #2 test cock and low pressure hose to #3 test cock.
**2.** Open #2 test cock and #3 test cock.
**3.** Slowly open valve "A" (high) and bleed air and water through vent hose; close valve "A".
**4.** Slowly open valve "C" (low) and bleed air and water through vent hose. Close valve "C" and observe differential pressure on gauge (should read a minimum of 5 PSID.)

**b) Test second test check valve for tightness against reverse flow:**

**1.** Connect vent hose to #4 test cock and turn on #4 test cock.
**2.** Open valve "A" and observe gauge reading and relief valve for discharge.
**3.** The differential pressure reading on the gauge will drop slightly and then remain steady. If the gauge reading continues to drop (until the relief valve discharges), it indicates that the second check valve is leaking.

**c) Test gate valve #2 for tightness:**

**1.** Close #2 test cock. If the pressure differential decreases (approaching zero) the #2 gate is reported to be leaking.
**2.** Open #2 test cock.

**NOTE:**

If gate valve #2 is leaking, test "A" and test "B" are invalid. A jumper hose or another shut off valve downstream of the device must be utilized.

**d) Test operation of the differential pressure relief valve:**

1. Close valve "B" (vent), (optional). Valve "A" should be open.
2. Very slowly open "C" (low) valve until the differential gauge needle starts to drop. Note the pressure reading when the relief valve starts to discharge. This gauge reading must be at least 2 PSI.

**e) Test conclusion**

1. Open #2 gate valve.
2. Close all test cocks.
3. Disconnect **VENT** hose from test cock #4.
4. Open valves "A", "B" and "C" to drain water pressure from the test gauge.
5. Remove hoses from test cocks #2 and #3 and drain remaining water in the gauge to prevent freezing.

### *8.3.2 Test procedure for DCV assemblies*

**1.** Close downstream shut-off "B". (Test kit "high" and "low" hose needle valves closed and "vent" hose needle open).

**2.** Attach "high" hose to test cock #2.

**3.** Attach "low" hose to test cock #3.

**4.** Open test cocks #2 and #3.

**5.** Bleed the air from the "high" hose. (Open the test kit high needle and bleed water through the vent hose to a bucket).

**6.** Bleed the air from the "low" hose. (Open the test kit low needle and bleed water through the vent hose to a bucket). Slowly close the needle valve.

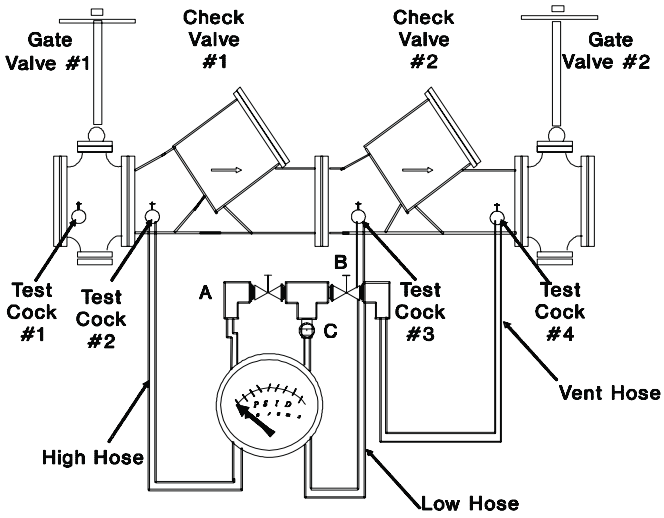


**7.** Read the differential pressure on the gauge. A minimum of 1 PSID is acceptable.

**8.** Repeat the above test procedure (steps #2 through #6) for testing the second check, i.e., move the hoses over with the "high" hose on test cock #3, and the "low" hose on test cock #4. Read the differential pressure on the gauge. A minimum of 1 PSID is acceptable.

**9.** Remove the test hoses, drain the test kit, and turn the water back on (open downstream shut-off B).

## 9.0 APPENDIX


| | Page |
|---|---|
| ***9.1*** *General Notes* | I-1 |
| ***9.2*** *Air-Gap Separation, Indoor Installation* | I-2 |
| ***9.3*** *Double Check Valve (DCV) Assembly* | |
| 9.3.1 Indoor Installation, N.R.S or O.S.& Y. Valves For meters sizes less than 3” | I-3 |
| 9.3.2 Indoor Installation, N.R.S or O.S.& Y. Valves For meters sizes less than 3” | I-4 |
| 9.3.3 Indoor Installation, N.R.S or O.S.& Y. Valves 3” to 10” Pipe size | I-5 |
| 9.3.4 Indoor Installation, N.R.S or O.S.& Y. Valves For meter sizes 3” or greater | I-6 |
| 9.3.5 Indoor Installation, N.R.S or O.S.& Y. Valves For meter sizes 3” or greater | I-7 |
| 9.3.6 Indoor Installation, N.R.S or O.S.& Y. Valves For meter sizes less than 3” | I-8 |
| 9.3.7 Outdoor Installation, N.R.S or O.S. & Y. Valves For meter sizes less than 3” | I-9 |
| 9.3.8 Outdoor Installation, N.R.S or O.S. & Y. Valves Below Ground | I-10 |
| 9.3.9 Outdoor Installation, N.R.S or O.S. & Y. Valves Above Ground | I-11 |
| 9.3.10 Outdoor Installation, N.R.S or O.S. & Y. Valves Above Ground | I-12 |
| 98.3.11 Outdoor Installation, N.R.S or O.S. & Y. Valves Above Ground Only | I-13 |
| ***9.4*** *Reduced Pressure Zone (RPZ) Assembly* | |
| 9.4.1 Indoor Installation, N.R.S. or O.S.& Y. Valves For meter sizes less than 3” | I-14 |
| 9.4.2 Indoor Installation, N.R.S. or O.S.& Y. Valves For meter sizes less than 3” | I-15 |
| 9.4.3 Indoor Installation, N.R.S. or O.S.& Y. Valves 3” to 10” Pipe Size | I-16 |
| 9.4.4 Indoor Installation, N.R.S. or O.S.& Y. Valves For meter sizes 3” or greater | I-17 |
| 9.4.5 Indoor Installation, N.R.S. or O.S.& Y. Valves For meter sizes 3” or greater | I-18 |
| 9.4.6 Indoor Installation, N.R.S. or O.S.& Y. Valves For meter sizes less than 3” | I-19 |
| 9.4.7 Outdoor Installation, N.R.S. or O.S.& Y. Valves Above Ground Only | I-20 |
| 9.4.8 Outdoor Installation, N.R.S. or O.S.& Y. Valves Above Ground Only | I-21 |

9.4.9 Outdoor Installation, N.R.S. or O.S.& Y. Valves Above Ground Only I-22

***9.5*** *Outdoor Installation, Above Ground Only Commercially Available Pre-fabricated Shelter* I-23

***9.6*** *Outdoor Installation, Above Ground Pre-cast or Cast In Place Concrete Shelter* I-24

***9.7*** *New Construction; Backflow Protection for Private, Domestic and Fire Water Services* I-25

***9.8*** *Existing Facilities; Retro-fitting Existing Private Domestic and Fire Water Services for Backflow Protection* I-26

***9.9*** *Fire Systems Containment* I-27 to I-31

***9.10*** *Meter Installation Standards* Dwg-1 to Dwg-8

1) Where possible, backflow prevention devices shall be located within the building after but close to the meter. In certain cases, the device may be installed at alternate locations such as in an outdoor shelter (pre-fabricated or cast-in-place) or underground vault. Outdoor RPZ must be installed above ground. DCV may be installed below ground level in vaults designed to prevent flooding. For alternative installations direct inquiries to L&I or:

Philadelphia Water Department
Bureau of Laboratory Services
1500 E. Hunting Park Avenue
Philadelphia, PA 19124-4941
Attn: cross connection control
Phone: 215-685-1419, 1420, or 1407

2) Refer to the Department's Meter Pit Standards for the design and installation to be made in meter (master) pits. For additional information, contact:

Water Main Records
ARA Tower, Suite 200
1101 Market Street
Phila. PA 19107
Phone: 215-685-6276

or

Meter Shop
29th & Cambria Streets
Phila. PA 19132
Phone: 215-685-9642

3) Protect backflow prevention devices from freezing, flooding and vandalism. Access for routine testing and maintenance shall be provided.

4) Backflow prevention devices shall be equipped with proper resilient seated valves as described in the manual, Chapter 7.0. The installation of a strainer before the device is strongly recommended to prevent mechanical damage. Join backflow prevention devices to the service pipe with:

- unions (for devices 3/4" - 2")
- flanges (for devices 3" - 10")

5) Install backflow prevention devices in horizontal position only unless the devices are approved for vertical orientation by the Water Department as indicated on the listing of Approved Backflow Prevention Devices. If parallel or by-pass installation is desired both lines shall be equipped with two same type backflow prevention devices. The combined hydraulic capacity of the parallel lines/devices shall be equal or greater than that of the line that is being subdivided.

6) Flush the system thoroughtly after the installation to assure the removal of contaminants in the assembly.

Philadelphia Water Department

# GENERAL NOTES

| | | | |
|---|---|---|---|
| DRAWN BY: | JP | DATE: | February 1998 |
| CHECKED BY: | JC | PAGE NO. | I-1 of 31 |

PG14

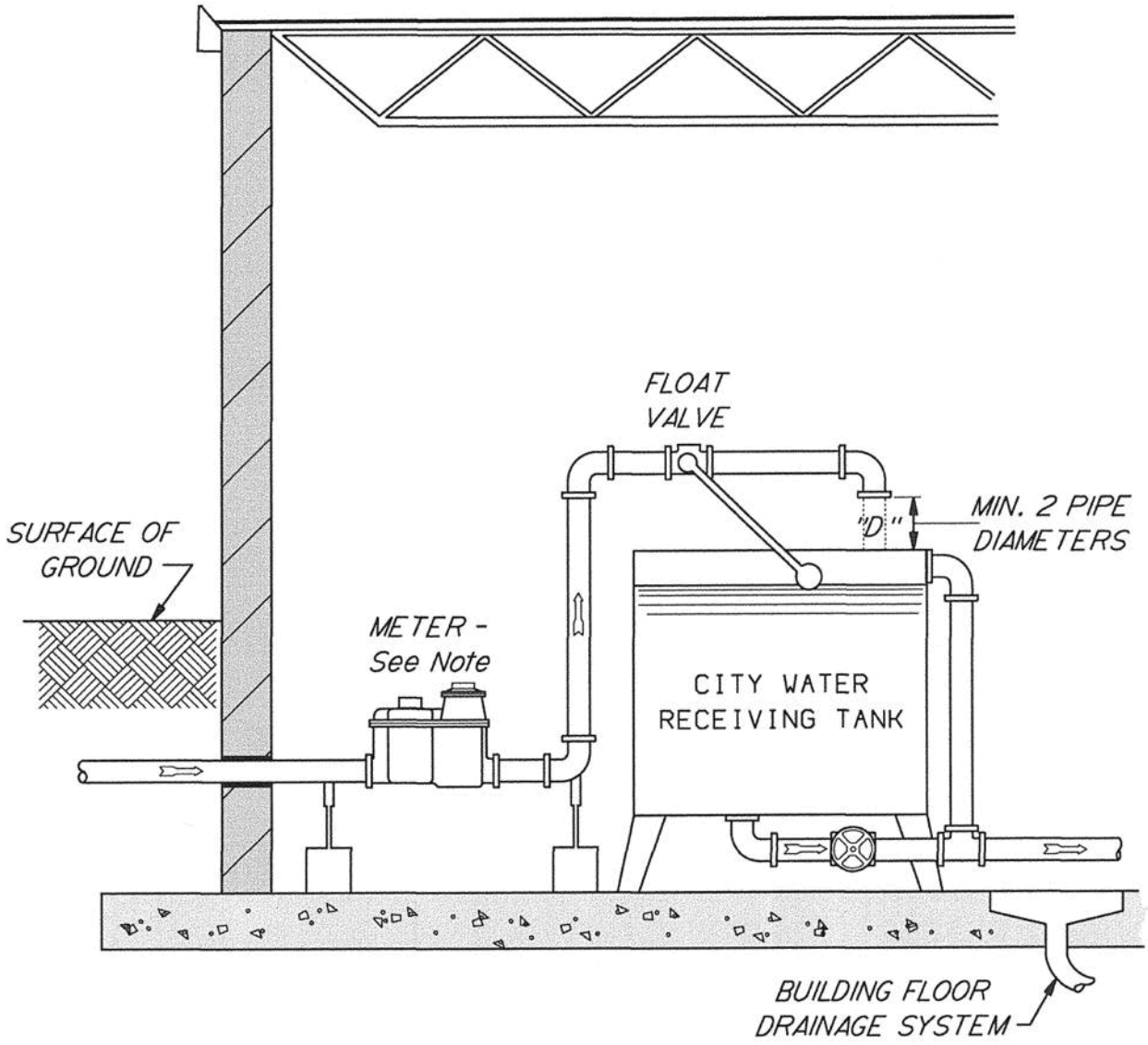


## TYPICAL BUILDING SECTION

NOTE:

This Does NOT Represent Actual Meter Installation. Refer To Latest Water Department Meter Installation Standards.

# INDOOR INSTALLATION

# AIR-GAP SEPARATION

Philadelphia Water Department

| | | | |
|---|---|---|---|
| DRAWN BY: | JP | DATE: | February 1998 |
| CHECKED BY: | JC | PAGE NO. | I-2 of 31 |

P62A

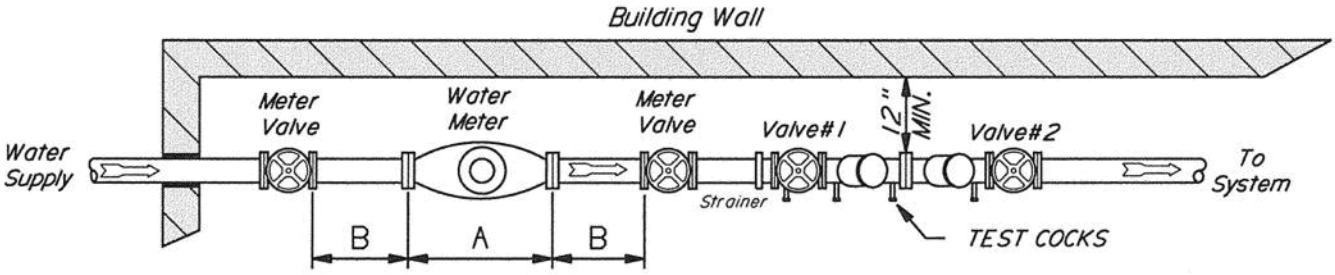


## Plan View

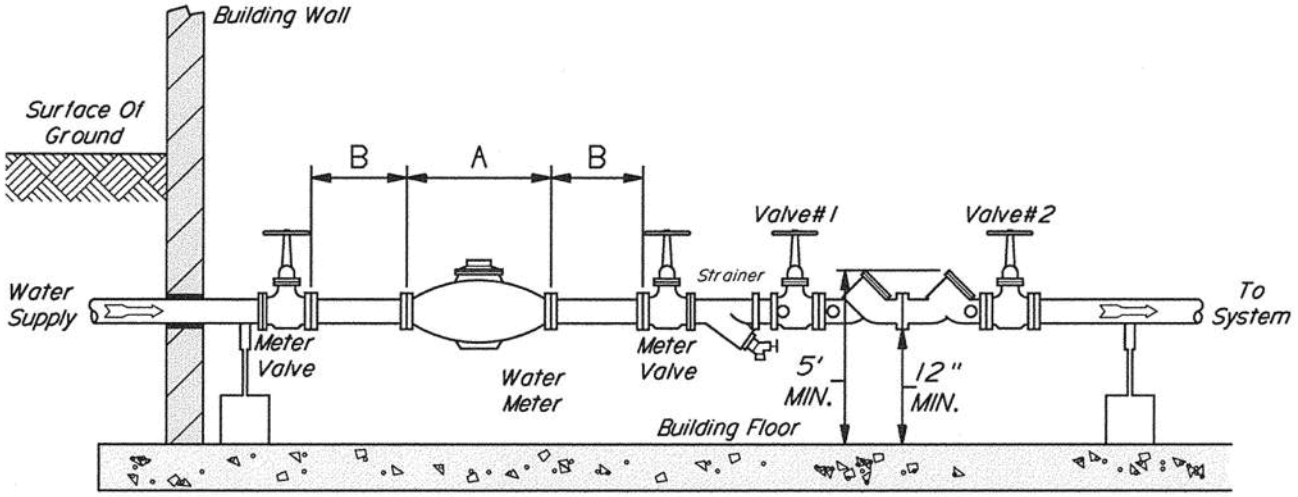


## Elevation View

| DIMENSION | PIPE SIZE | |
|---|---|---|
| | 1'-$\frac{1}{2}$" | 2" |
| A | 1'-1$\frac{1}{2}$" | 1'-5" |
| B | 1'-0" | 1'-4" |

NOTE:

Backflow Preventers To Be Set A Minimum Of 12 in. From Floor To The Lowest Part Of Device. And A Maximum Of 5 Ft. From The Floor To The Top Of Device. And 12 in. From Any Wall.

FOR N. R. S. OR O. S. & Y. RESILIENT SEATED VALVE TYPES

INDOOR INSTALLATION
For Meter sizes less than 3"

Philadelphia Water Department

# DCV INSTALLATION
(DOUBLE CHECK VALVE BACKFLOW PREVENTION DEVICE)

| | | | |
|---|---|---|---|
| DRAWN BY: | JP | DATE: | February 1998 |
| CHECKED BY: | JC | PAGE NO. | I-3 of 31 |

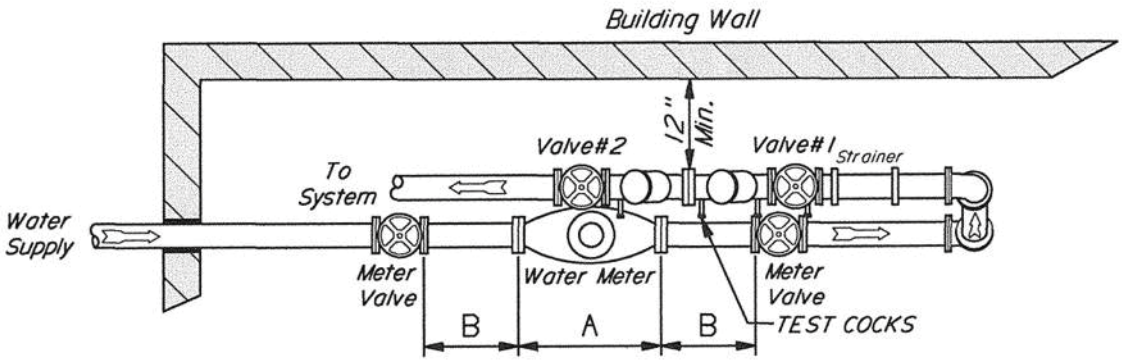


## Plan View

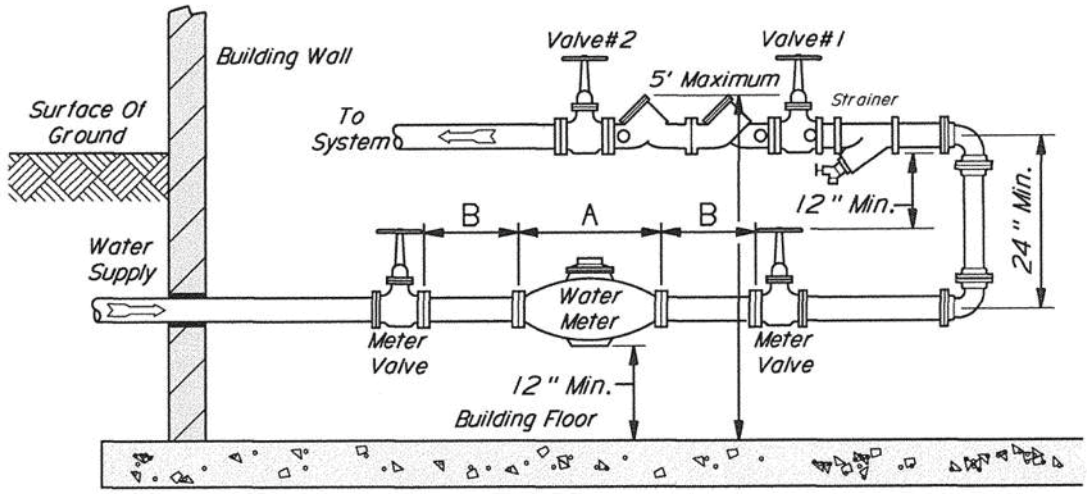


## Elevation View

| DIMENSION | PIPE SIZE | |
|---|---|---|
| | 1'-$\frac{1}{2}$" | 2" |
| A | 1'-1$\frac{1}{2}$" | 1'-5" |
| B | 1'-0" | 1'-4" |

NOTE:

Backflow Preventers To Be Set A Minimum Of 12 in. From Floor To The Lowest Part Of Device. And A Maximum Of 5 Ft. From The Floor To The Top Of Device. And 12 in. From Any Wall.

FOR N. R. S. OR O. S. & Y. RESILIENT SEATED VALVE TYPES

INDOOR INSTALLATION
For Meter sizes less than 3"

Philadelphia Water Department

# DCV INSTALLATION
(DOUBLE CHECK VALVE BACKFLOW PREVENTION DEVICE)

| | | | |
|---|---|---|---|
| DRAWN BY: | JP | DATE: | February 1998 |
| CHECKED BY: | JC | PAGE NO. | I-4 of 31 |

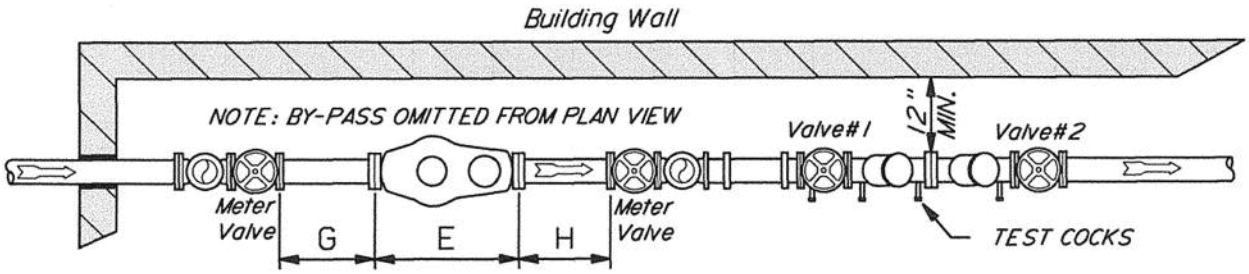


## Plan View

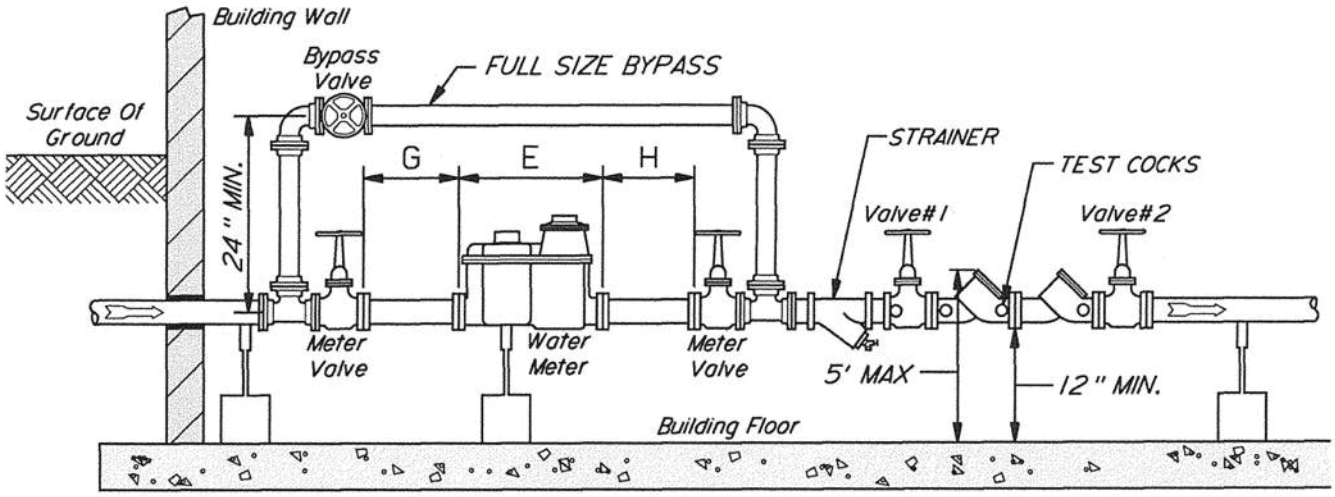


## Elevation View

| DIMENSION | PIPE SIZE | | | | |
|---|---|---|---|---|---|
| | 3" | 4" | 6" | 8" | 10" |
| E | 2'-$\frac{1}{2}$" | 2'-5$\frac{1}{2}$" | 3'-1" | 4'-5$\frac{1}{2}$" | 5"-8$\frac{3}{4}$" |
| G | 1'-6" | 2'-0" | 2'-6" | 3'-6" | 2'-6" |
| H | 1'-0" | 1'-6" | 1'-6" | 2'-0" | 2'-6" |

NOTE:

Backflow Preventers To Be Set A Minimum Of 12 in. From Floor To The Lowest Part Of Device. And A Maximum Of 5 Ft. From The Floor To The Top Of Device. And 12 in. From Any Wall.

FOR N.R.S. OR O.S.& Y. RESILIENT SEATED VALVE TYPES

INDOOR INSTALLATION
3" TO 10" PIPE SIZE

Philadelphia Water Department

# DCV INSTALLATION
(DOUBLE CHECK VALVE BACKFLOW PREVENTION DEVICE)

| | | | |
|---|---|---|---|
| DRAWN BY: | JP | DATE: | February 1998 |
| CHECKED BY: | JC | PAGE NO. | I-5 of 31 |

PG6A

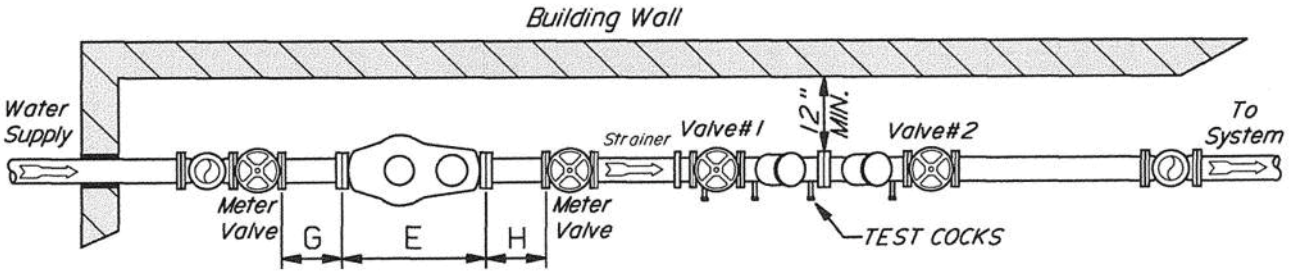


## Plan View

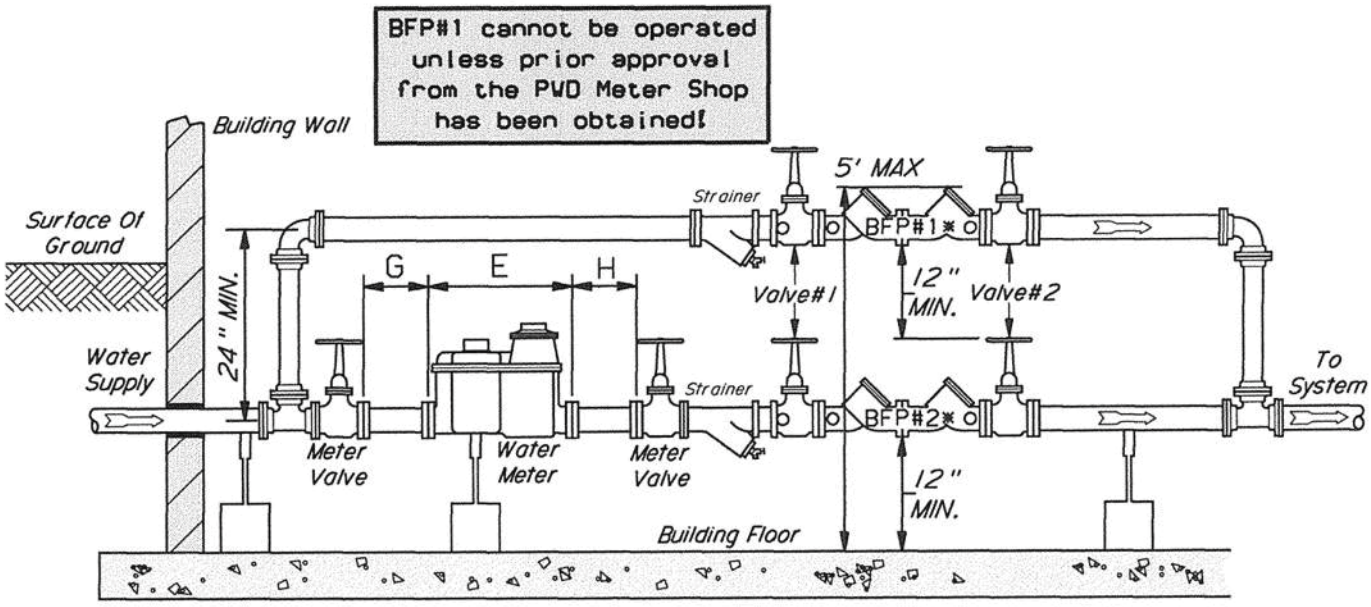


## Elevation View

| DIMENSION | PIPE SIZE | | | | |
|---|---|---|---|---|---|
| | 3" | 4" | 6" | 8" | 10" |
| E | 2'-$\frac{1}{2}$" | 2'-5$\frac{1}{2}$" | 3'-1" | 4'-5$\frac{1}{2}$" | 5"-8$\frac{3}{4}$" |
| G | 1'-6" | 2'-0" | 2'-6" | 3'-6" | 2'-6" |
| H | 1'-0" | 1'-6" | 1'-6" | 2'-0" | 2'-6" |

NOTE:

Backflow Preventers To Be Set A Minimum Of 12 in. From Floor To The Lowest Part Of Device. And A Maximum Of 5 Ft. From The Floor To The Top Of Device. And 12 in. From Any Wall.

FOR N.R.S. OR O.S. & Y. RESILIENT SEATED VALVE TYPES

# INDOOR INSTALLATION

For Meter sizes 3" or Greater

Philadelphia Water Department

# DCV INSTALLATION

(DOUBLE CHECK VALVE BACKFLOW PREVENTION DEVICE)

| | | | |
|---|---|---|---|
| DRAWN BY: | JP | DATE: | February 1998 |
| CHECKED BY: | JC | PAGE NO. | I-6 of 31 |

## Plan View

| DIMENSION | PIPE SIZE 3" | 4" | 6" | 8" | 10" |
|---|---|---|---|---|---|
| E | 2'-$5\frac{1}{2}$" | 2'-$5\frac{1}{2}$" | 3'-1" | 4'-$5\frac{1}{2}$" | 5"-$8\frac{3}{4}$" |
| G | 1'-6" | 2'-0" | 2'-6" | 3'-6" | 2'-6" |
| H | 1'-0" | 1'-6" | 1'-6" | 2'-0" | 2'-6" |




## Elevation View

FOR N. R. S. OR O. S. & Y.
RESILIENT SEATED VALVE TYPES

# INDOOR INSTALLATION

For Meter sizes 3" or Greater

Philadelphia Water Department

# DCV INSTALLATION

(DOUBLE CHECK VALVE BACKFLOW PREVENTION DEVICE)

| | | | |
|---|---|---|---|
| DRAWN BY: | JP | DATE: | February 1998 |
| CHECKED BY: | JC | PAGE NO. | I-7 of 31 |

PGIPIT

Philadelphia Water Department

# DCV INSTALLATION

(DOUBLE CHECK VALVE BACKFLOW PREVENTION DEVICE)

FOR N.R.S. OR O.S.& Y. RESILIENT SEATED VALVE TYPES

INDOOR INSTALLATION

For Meter sizes less than 3"

DRAWN BY: JP

CHECKED BY: JC

DATE: February 1998

PAGE NO. I-8 of 31

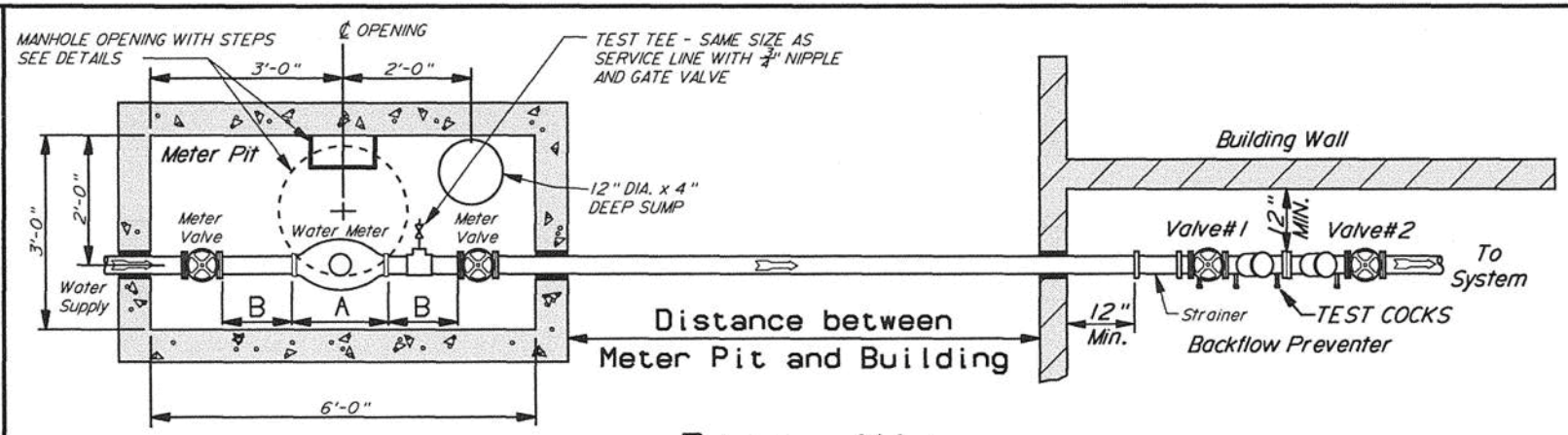


## Plan View

| DIMENSION | PIPE SIZE | |
|---|---|---|
| | 1'-½" | 2" |
| A | 1'-1½" | 1'-5" |
| B | 1'-0" | 1'-4" |

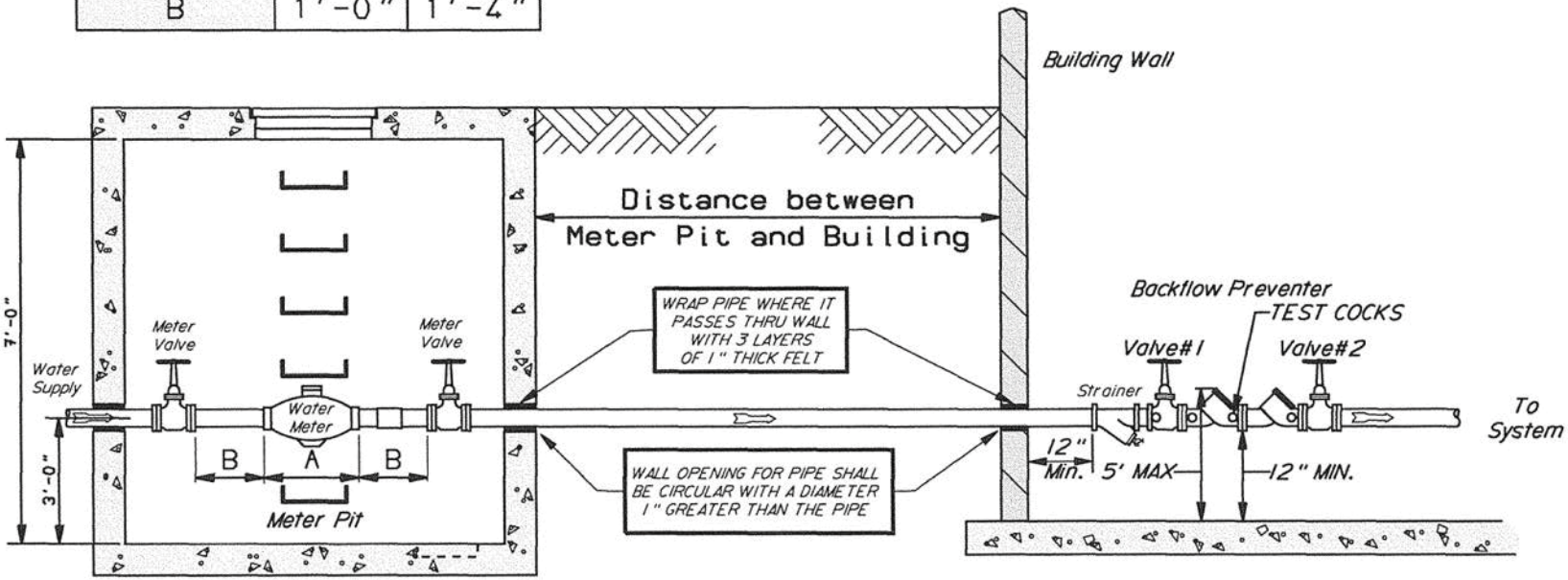


## Elevation View

RPZ6

Philadelphia Water Department

# DCV INSTALLATION

(DOUBLE CHECK VALVE BACKFLOW PREVENTION DEVICE)

FOR N.R.S. OR O.S.& Y. RESILIENT SEATED VALVE TYPES

OUTDOOR INSTALLATION

For Meter sizes less than 3"

DRAWN BY: JP

CHECKED BY: JC

DATE: February 1998

PAGE NO. I-9 of 31

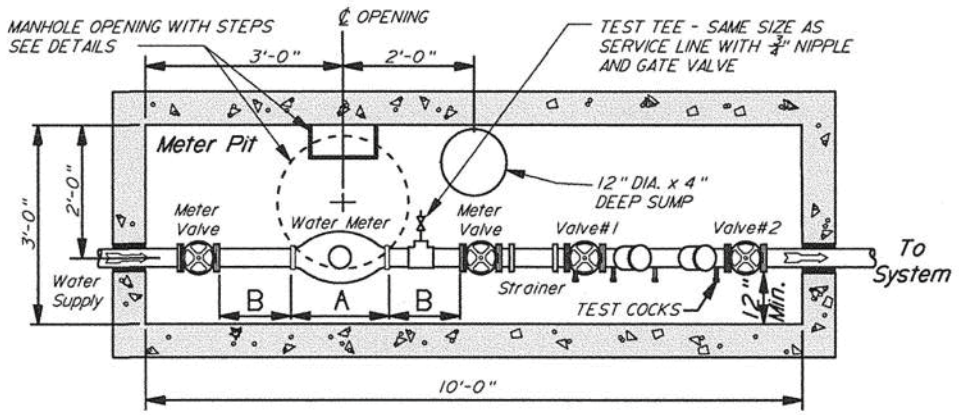


## Plan View

| DIMENSION | PIPE SIZE | |
|---|---|---|
| | 1'-1/2" | 2" |
| A | 1'-1 1/2" | 1'-5" |
| B | 1'-0" | 1'-4" |

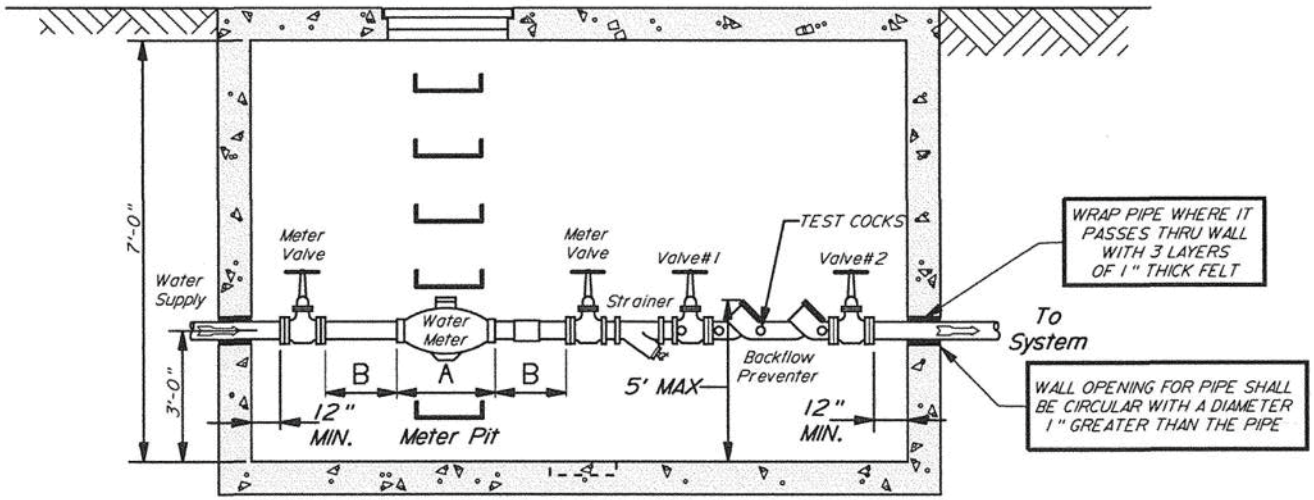


## Elevation View

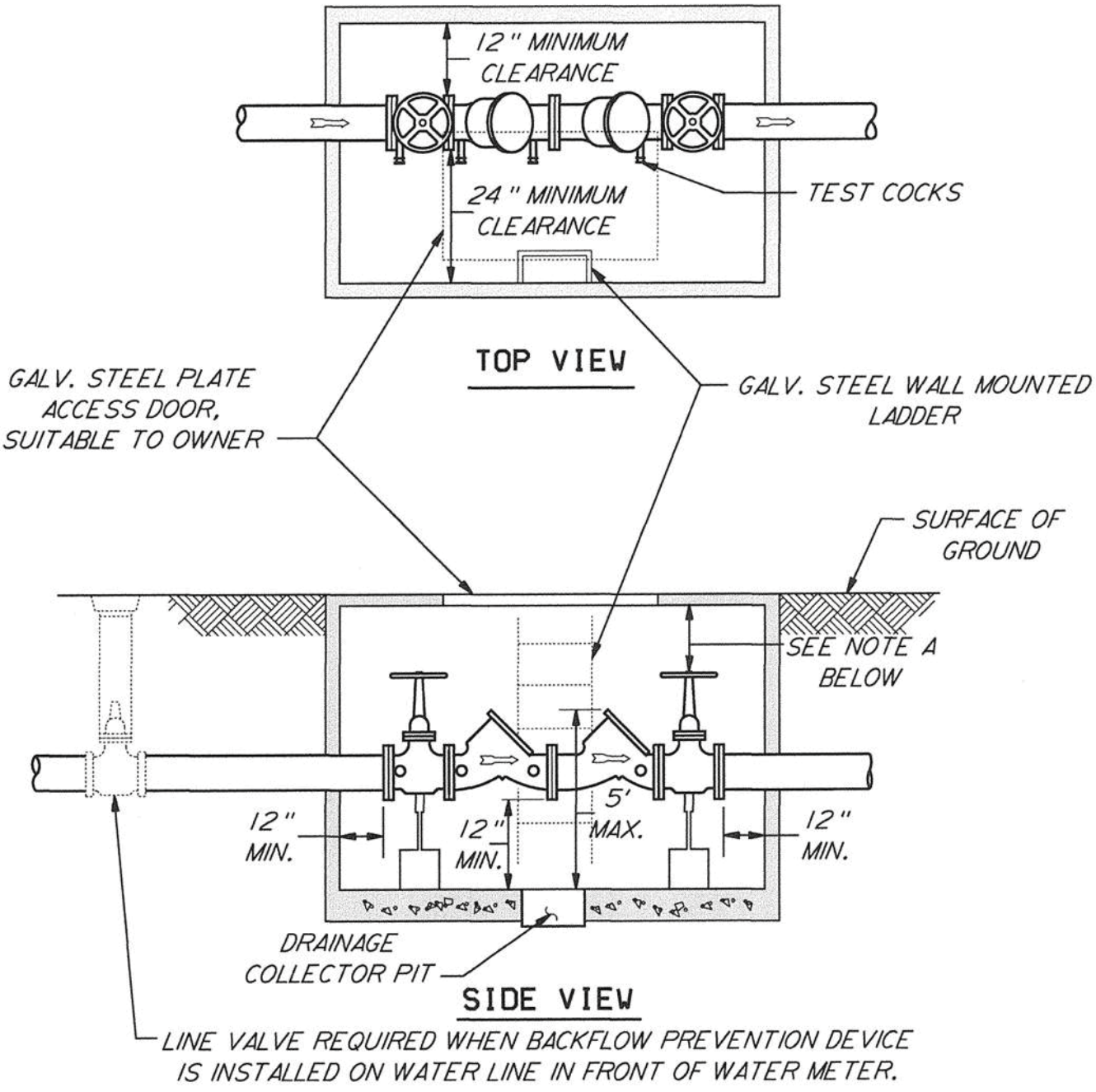


NOTE A: VALVE HEADROOM REQUIREMENTS:
N.R.S. - 12"MIN. TO TOP OF WHEEL.
O.S.& Y. - 3"MIN. TO TOP OF FULLY EXTENDED STEM.

FOR N. R. S. OR O. S. & Y. RESILIENT SEATED TYPE VALVES

OUTDOOR INSTALLATION *BELOW GROUND*

Philadelphia Water Department

# DCV INSTALLATION

(DOUBLE CHECK VALVE BACKFLOW PREVENTION DEVICE)

| | | | |
|---|---|---|---|
| DRAWN BY: | JP | DATE: | February 1998 |
| CHECKED BY: | JC | PAGE NO. | I-10 of 31 |

PG13A

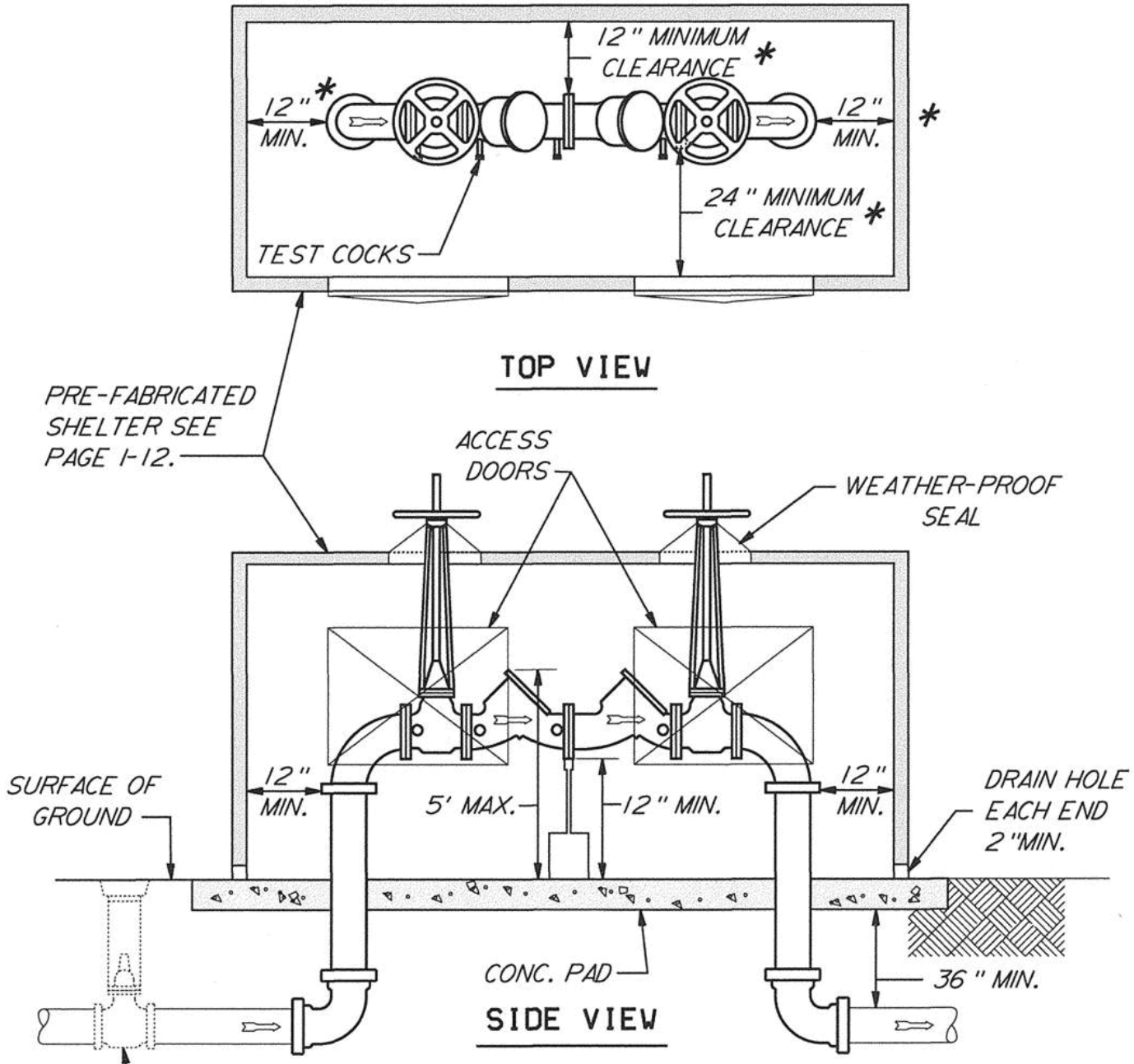


LINE VALVE REQUIRED WHEN BACKFLOW PREVENTION DEVICE IS INSTALLED ON WATER LINE IN FRONT OF WATER METER.

* MINIMUM CLEARANCE ONLY REQUIRED IF SHELTER IS DESIGNED FOR MAN ENTRY. A NON-MAN ENTRY SHELTER SHALL HAVE ACCESS DOORS FOR ROUTINE TESTING AND A READILY REMOVABLE COVER AS ALSO SHOWN ABOVE.

| FOR O. S. & Y. RESILIENT SEATED TYPE VALVES | OUTDOOR INSTALLATION *ABOVE GROUND* |
|---|---|

Philadelphia Water Department

# DCV INSTALLATION

(DOUBLE CHECK VALVE BACKFLOW PREVENTION DEVICE)

| | | | |
|---|---|---|---|
| DRAWN BY: | JP | DATE: | February 1998 |
| CHECKED BY: | JC | PAGE NO. | I-11 of 31 |

PG12A

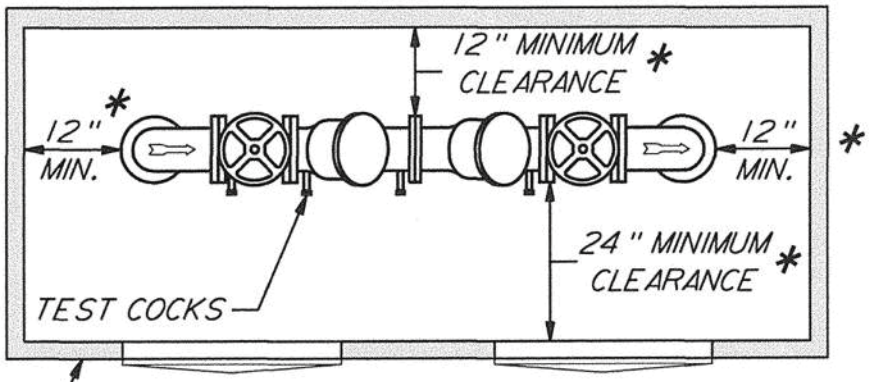


TOP VIEW

PRE-FABRICATED SHELTER SEE PAGE I-12.

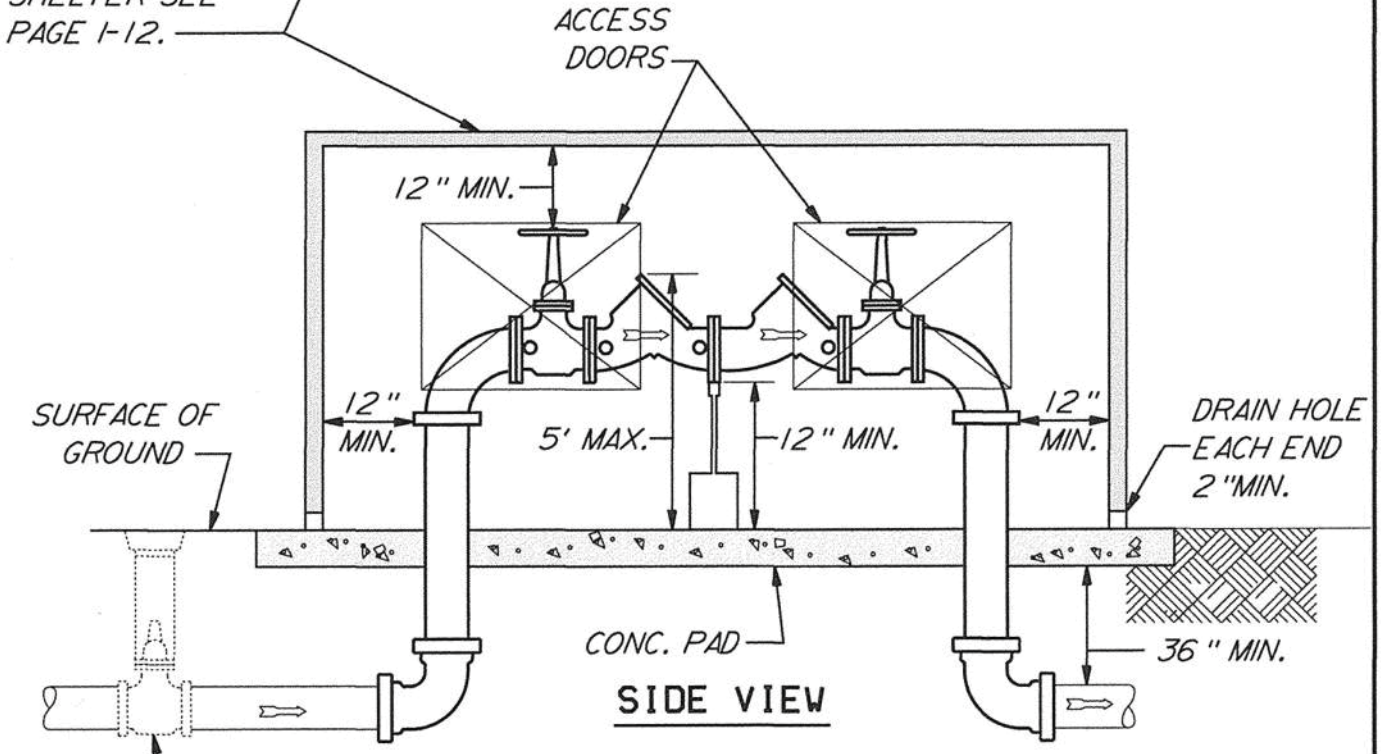


SIDE VIEW

LINE VALVE REQUIRED WHEN BACKFLOW PREVENTION DEVICE IS INSTALLED ON WATER LINE IN FRONT OF WATER METER.

* MINIMUM CLEARANCE ONLY REQUIRED IF SHELTER IS DESIGNED FOR MAN ENTRY. A NON-MAN ENTRY SHELTER SHALL HAVE ACCESS DOORS FOR ROUTINE TESTING AND A READILY REMOVABLE COVER AS ALSO SHOWN ABOVE.

| FOR N. R. S. RESILIENT SEATED TYPE VALVES | OUTDOOR INSTALLATION *ABOVE GROUND* |
|---|---|

Philadelphia Water Department

# DCV INSTALLATION

(DOUBLE CHECK VALVE BACKFLOW PREVENTION DEVICE)

| | | | |
|---|---|---|---|
| DRAWN BY: | JP | DATE: | February 1998 |
| CHECKED BY: | JC | PAGE NO. | I-12 of 31 |

PG11A

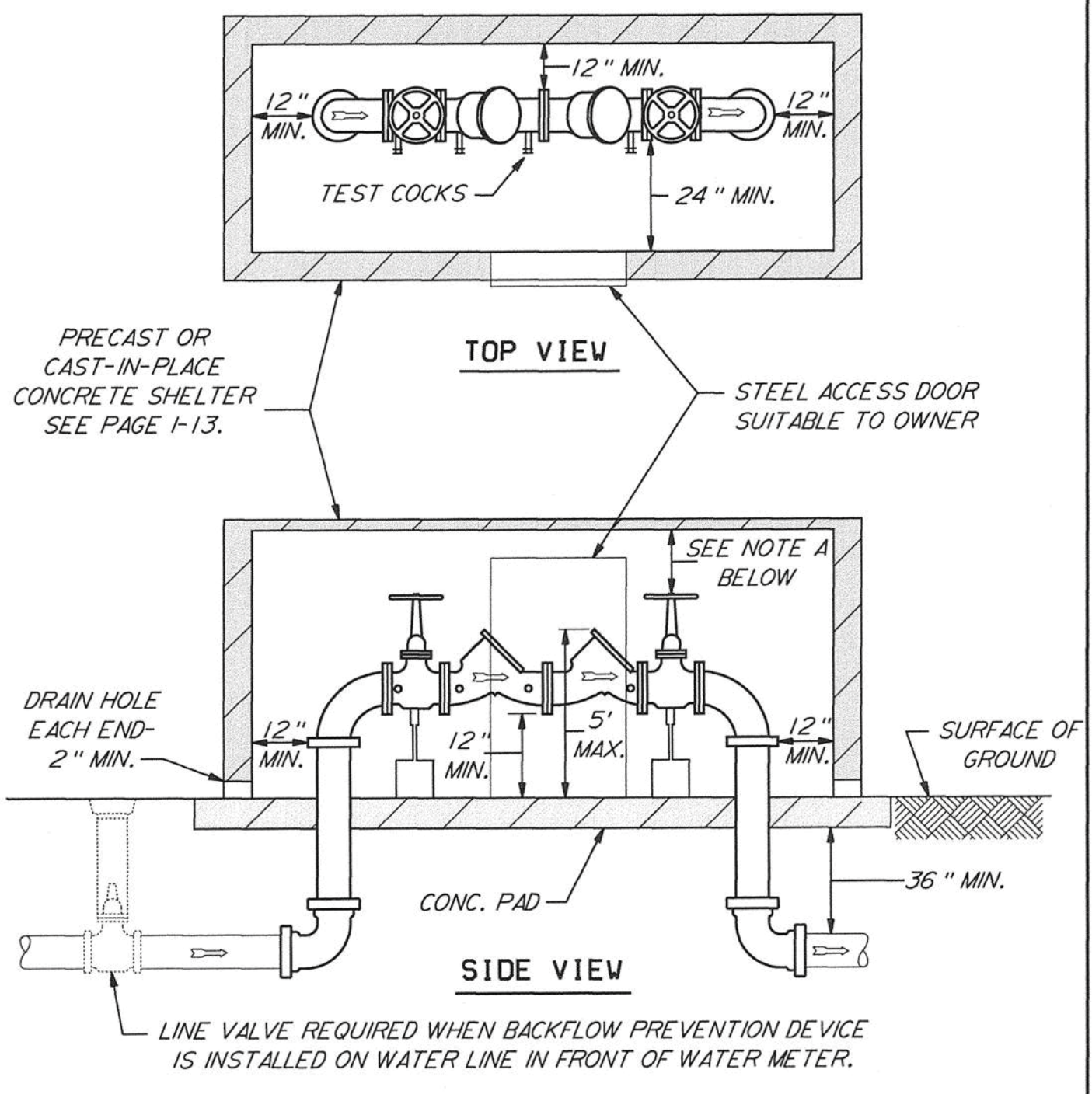


NOTE A: VALVE HEADROOM REQUIREMENTS:
N.R.S. - 12"MIN. TO TOP OF WHEEL.
O.S.& Y. - 3"MIN. TO TOP OF FULLY EXTENDED STEM.

FOR N. R. S. OR O. S. & Y. RESILIENT SEATED TYPE VALVES

OUTDOOR INSTALLATION
*ABOVE GROUND ONLY*

Philadelphia Water Department

# DCV INSTALLATION
(DOUBLE CHECK VALVE BACKFLOW PREVENTION DEVICE)

| | | | |
|---|---|---|---|
| DRAWN BY: | JP | DATE: | February 1998 |
| CHECKED BY: | JC | PAGE NO. | I-13 of 31 |

PG10A

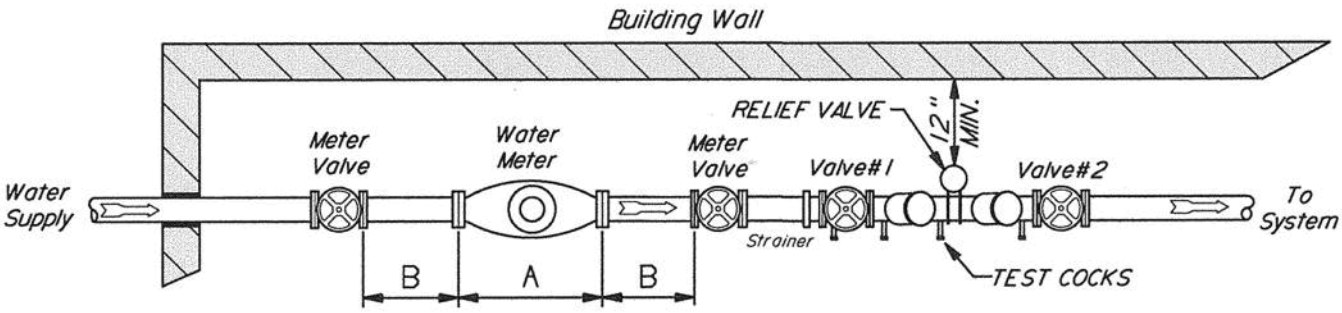


## Plan View

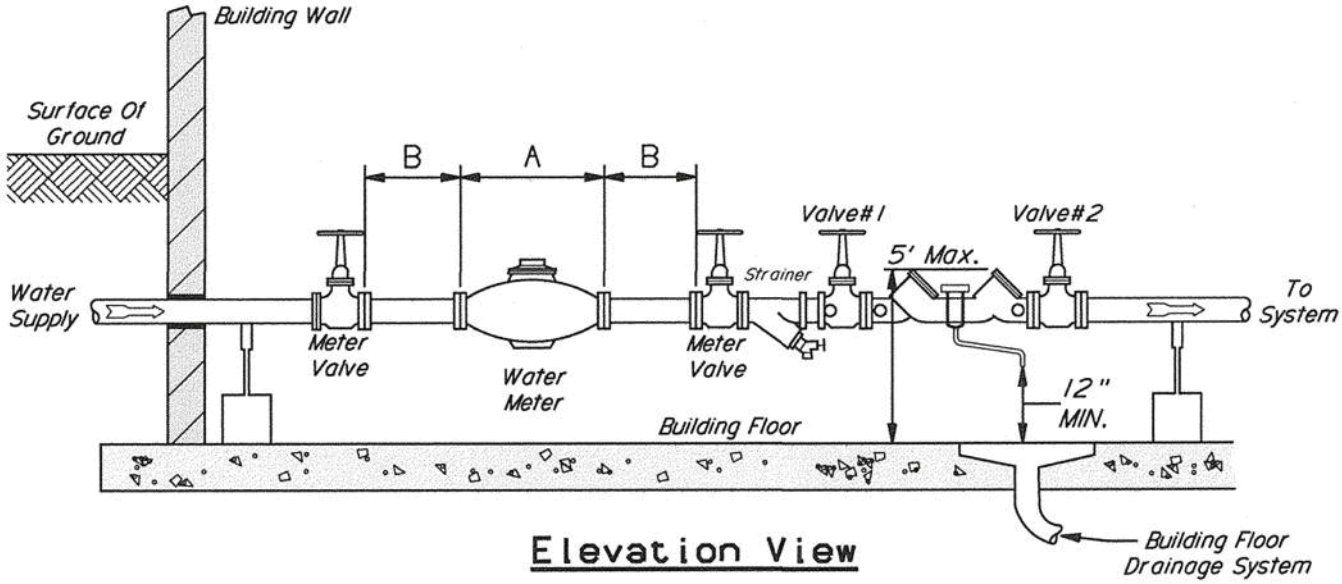


## Elevation View

| DIMENSION | PIPE SIZE | |
|---|---|---|
| | $1'-\frac{1}{2}"$ | 2" |
| A | $1'-1\frac{1}{2}"$ | 1'-5" |
| B | 1'-0" | 1'-4" |

NOTE:

Backflow Preventers To Be Set A Minimum Of 12 in. From Floor To The Lowest Part Of Device. And A Maximum Of 5 Ft. From The Floor To The Top Of Device. And 12 in. From Any Wall.

FOR N. R. S. OR O. S. & Y. RESILIENT SEATED VALVE TYPES

# INDOOR INSTALLATION

For Meter sizes less than 3"

Philadelphia Water Department

# RPZ INSTALLATION

(REDUCED PRESSURE ZONE BACKFLOW PREVENTION DEVICE)

| | | | |
|---|---|---|---|
| DRAWN BY: | JP | DATE: | February 1998 |
| CHECKED BY: | JC | PAGE NO. | I-14 of 31 |

RPZ4

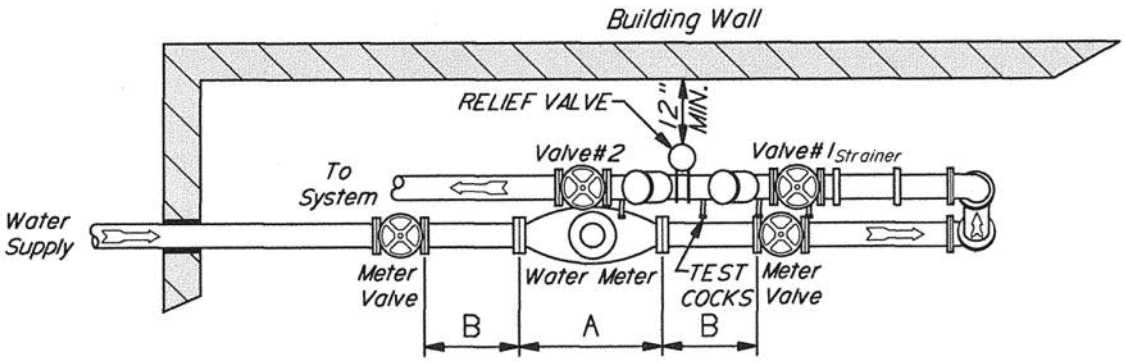


## Plan View

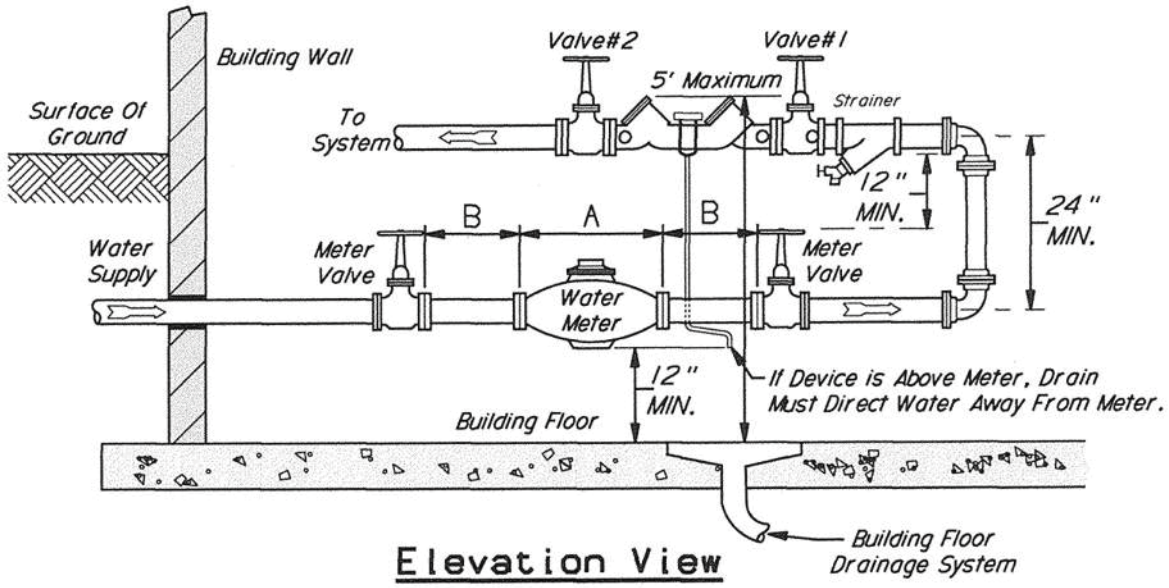


## Elevation View

| DIMENSION | PIPE SIZE | |
|---|---|---|
| | 1'-½" | 2" |
| A | 1'-1½" | 1'-5" |
| B | 1'-0" | 1'-4" |

NOTE:

Backflow Preventers To Be Set A Minimum Of 12 inches From Floor To The Lowest Part Of Device. And A Maximum Of 5 Ft. From The Floor To The Top Of Device. And 12 inches From Any Wall.

FOR N. R. S. OR O. S. & Y. RESILIENT SEATED VALVE TYPES

INDOOR INSTALLATION

For Meter sizes less than 3"

Philadelphia Water Department

# RPZ INSTALLATION

(REDUCED PRESSURE ZONE BACKFLOW PREVENTION DEVICE)

| | | | |
|---|---|---|---|
| DRAWN BY: | JP | DATE: | February 1998 |
| CHECKED BY: | JC | PAGE NO. | I-15 of 31 |

RPZ3

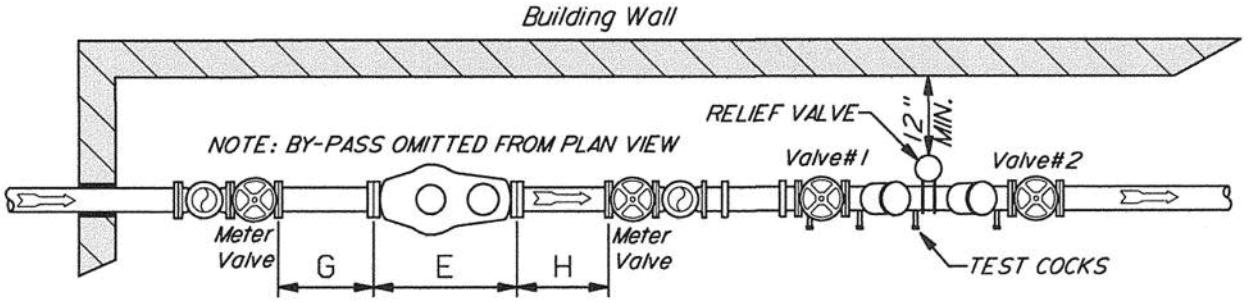


## Plan View

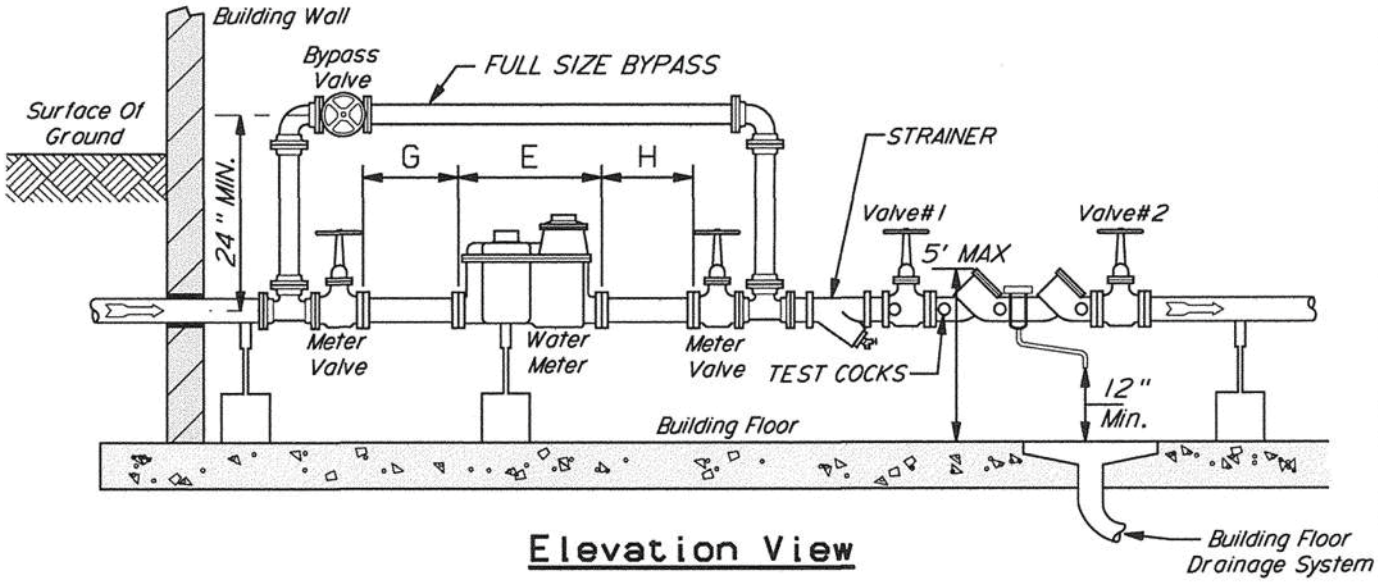


## Elevation View

| DIMENSION | PIPE SIZE | | | | |
|---|---|---|---|---|---|
| | 3" | 4" | 6" | 8" | 10" |
| E | 2'-$\frac{1}{2}$" | 2'-5$\frac{1}{2}$" | 3'-1" | 4'-5$\frac{1}{2}$" | 5"-8$\frac{3}{4}$" |
| G | 1'-6" | 2'-0" | 2'-6" | 3'-6" | 2'-6" |
| H | 1'-0" | 1'-6" | 1'-6" | 2'-0" | 2'-6" |

NOTE:

Backflow Preventers To Be Set A Minimum Of 12 in. From Floor To The Lowest Part Of Device. And A Maximum Of 5 Ft. From The Floor To The Top Of Device. And 12 in. From Any Wall.

FOR N.R.S. OR O.S.& Y. RESILIENT SEATED VALVE TYPES

INDOOR INSTALLATION
3" TO 10" PIPE SIZE

Philadelphia Water Department

# RPZ INSTALLATION

(REDUCED PRESSURE ZONE BACKFLOW PREVENTION DEVICE)

| | | | |
|---|---|---|---|
| DRAWN BY: | JP | DATE: | February 1998 |
| CHECKED BY: | JC | PAGE NO. | I-16 of 31 |

RPZI

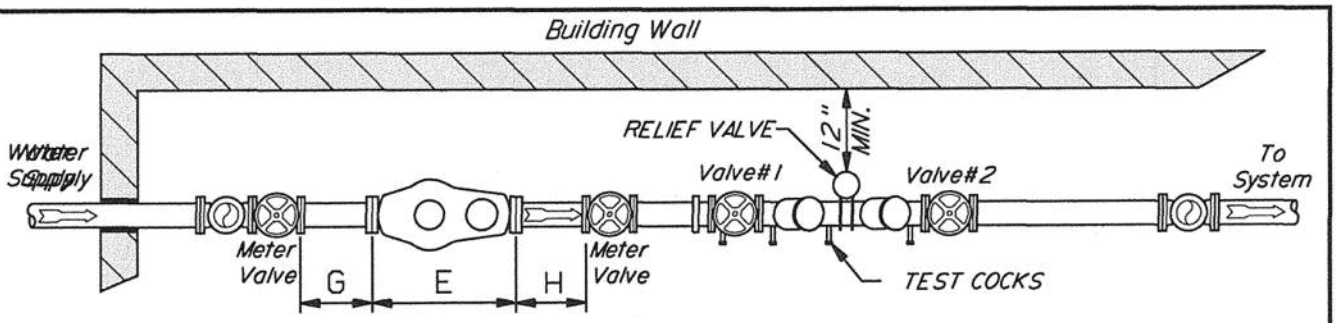


## Plan View

BFP#1 cannot be operated unless prior approval from the PWD Meter Shop has been obtained!

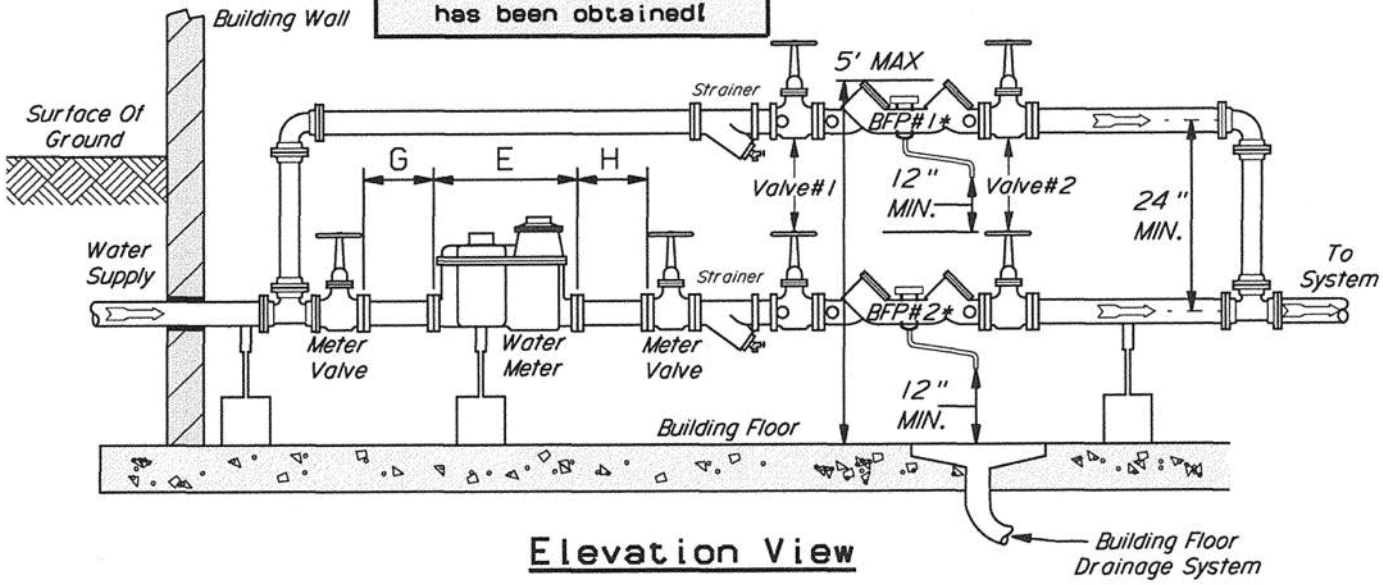


## Elevation View

*BFP - Backflow Preventer

| DIMENSION | PIPE SIZE | | | | |
|---|---|---|---|---|---|
| | 3" | 4" | 6" | 8" | 10" |
| E | 2'-$\frac{1}{2}$" | 2'-5$\frac{1}{2}$" | 3'-1" | 4'-5$\frac{1}{2}$" | 5"-8$\frac{3}{4}$" |
| G | 1'-6" | 2'-0" | 2'-6" | 3'-6" | 2'-6" |
| H | 1'-0" | 1'-6" | 1'-6" | 2'-0" | 2'-6" |

NOTE:

Backflow Preventers To Be Set A Minimum Of 12 inches From Floor To The Lowest Part Of Device. And A Maximum Of 5 Ft. From The Floor To The Top Of Device. And 12 inches From Any Wall.

FOR N. R. S. OR O. S. & Y. RESILIENT SEATED VALVE TYPES

# INDOOR INSTALLATION

For Meter sizes 3" or Greater

Philadelphia Water Department

# RPZ INSTALLATION

(REDUCED PRESSURE ZONE BACKFLOW PREVENTION DEVICE)

| | | | |
|---|---|---|---|
| DRAWN BY: | JP | DATE: | February 1998 |
| CHECKED BY: | JC | PAGE NO. | I-17 of 31 |

RPZ5

RPZ2

Philadelphia Water Department

FOR N.R.S. OR O.S. & Y. RESILIENT SEATED VALVE TYPES

# RPZ INSTALLATION

(REDUCED PRESSURE ZONE BACKFLOW PREVENTION DEVICE)

## INDOOR INSTALLATION

For Meter sizes 3" or Greater

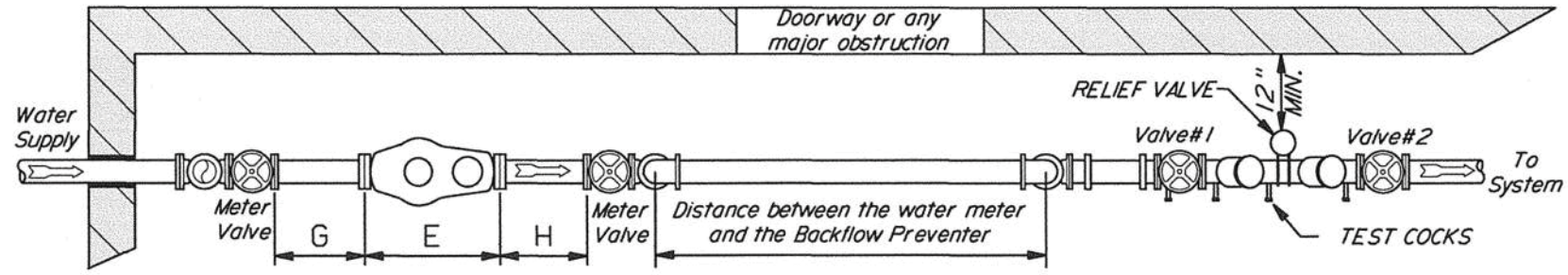


## Plan View

| DIMENSION | PIPE SIZE | | | | |
|---|---|---|---|---|---|
| | 3" | 4" | 6" | 8" | 10" |
| E | 2'-½" | 2'-5½" | 3'-1" | 4'-5½" | 5"-8¾" |
| G | 1'-6" | 2'-0" | 2'-6" | 3'-6" | 2'-6" |
| H | 1'-0" | 1'-6" | 1'-6" | 2'-0" | 2'-6" |

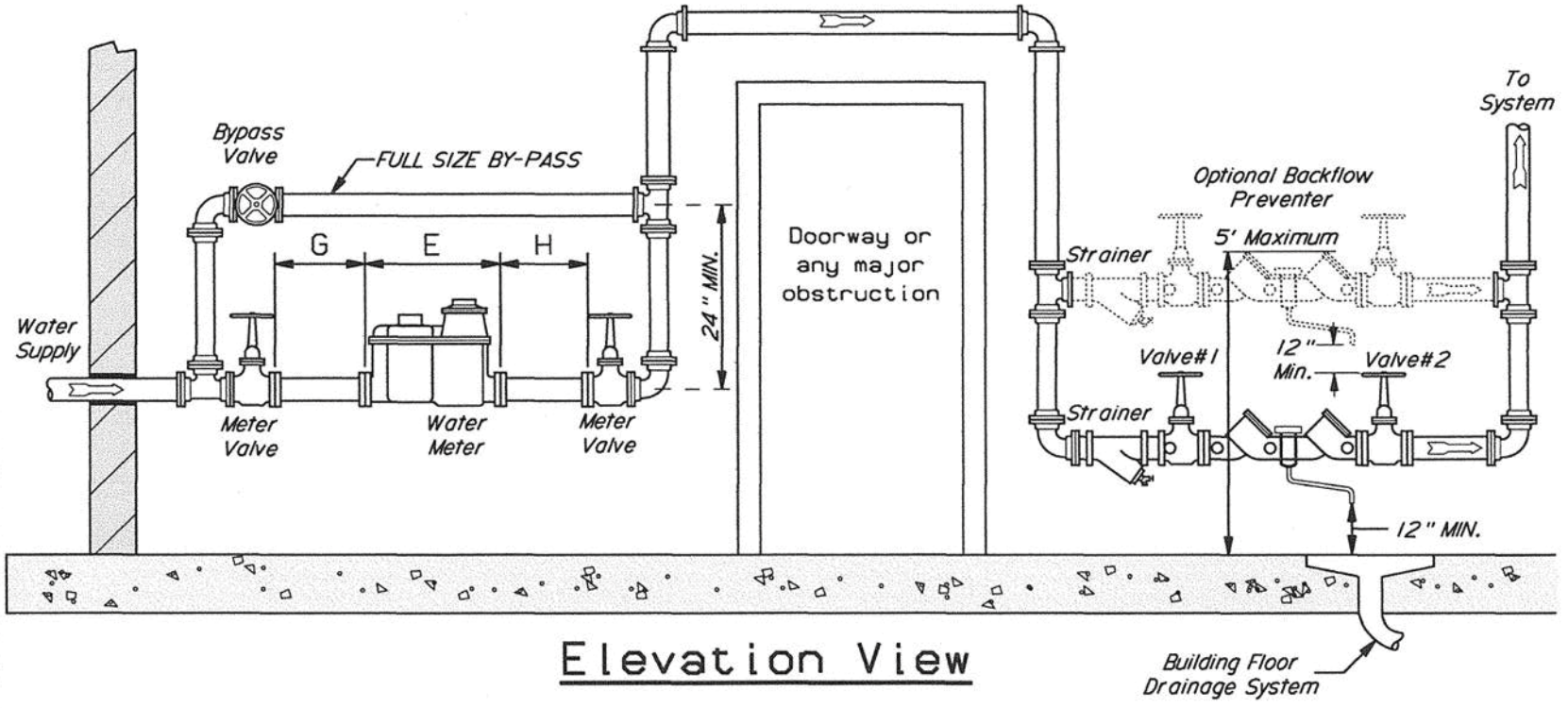


## Elevation View

| | |
|---|---|
| DRAWN BY: | JP |
| CHECKED BY: | JC |
| DATE: | February 1998 |
| PAGE NO. | I-18 of 31 |

PGIPIT

Philadelphia Water Department

# RPZ INSTALLATION

(DOUBLE CHECK VALVE BACKFLOW PREVENTION DEVICE)

FOR N.R.S. OR O.S.& Y. RESILIENT SEATED VALVE TYPES

INDOOR INSTALLATION

For Meter sizes less than 3"

DRAWN BY: JP

CHECKED BY: JC

DATE: February 1998

PAGE NO. I-19 of 31

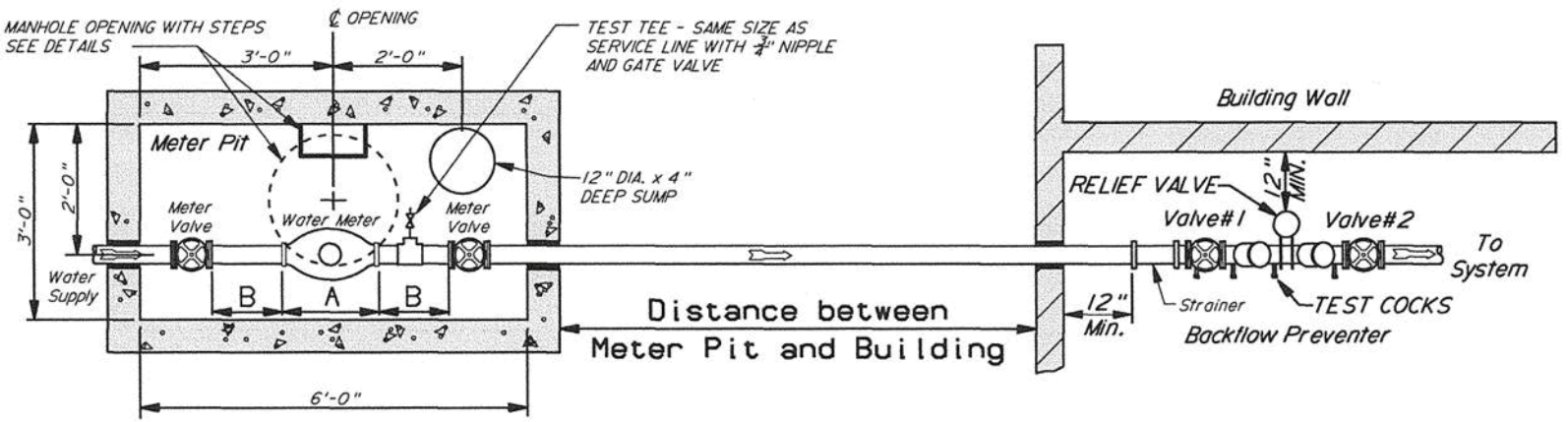


## Plan View

| DIMENSION | PIPE SIZE | |
|---|---|---|
| | 1'-½" | 2" |
| A | 1'-1½" | 1'-5" |
| B | 1'-0" | 1'-4" |

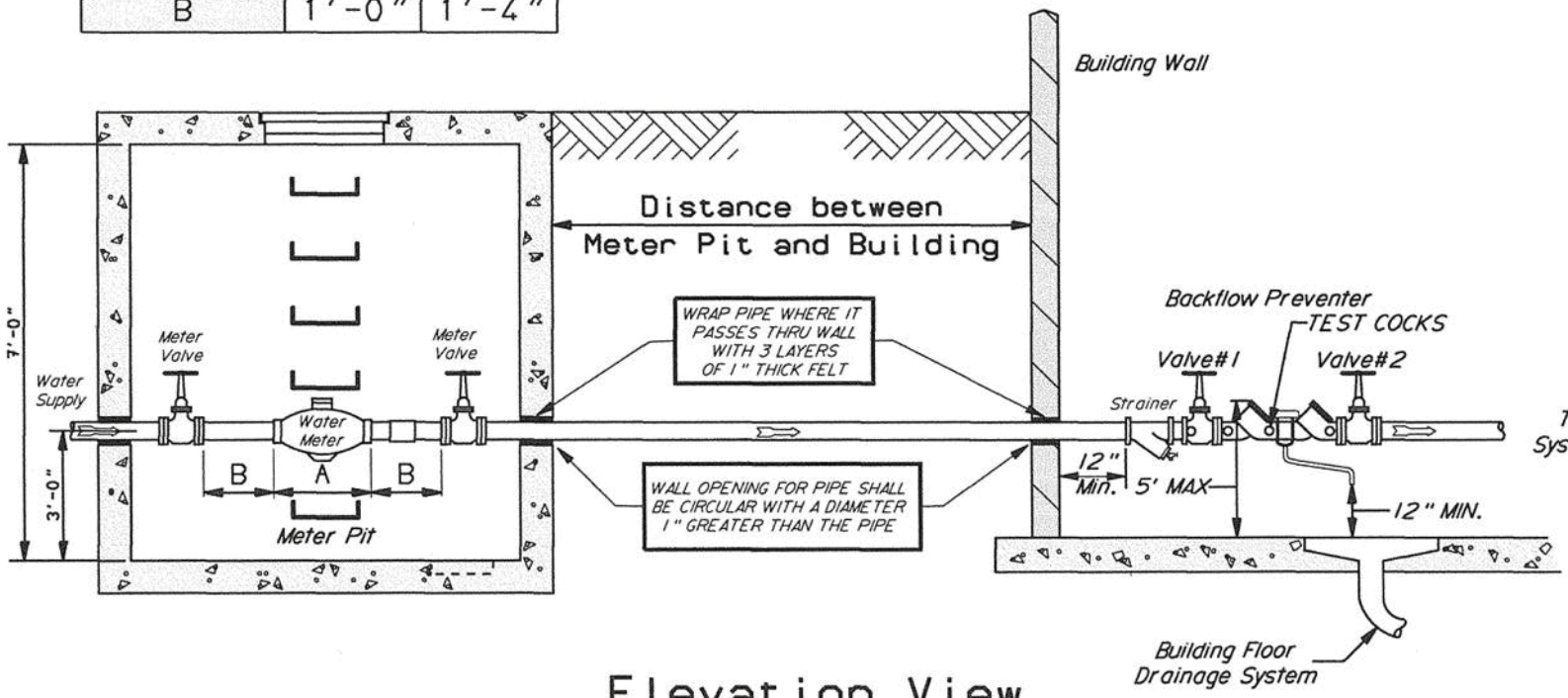


## Elevation View

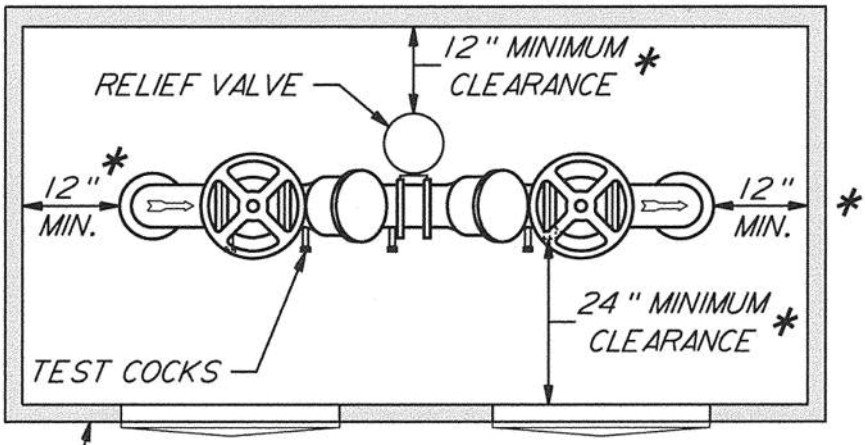


TOP VIEW

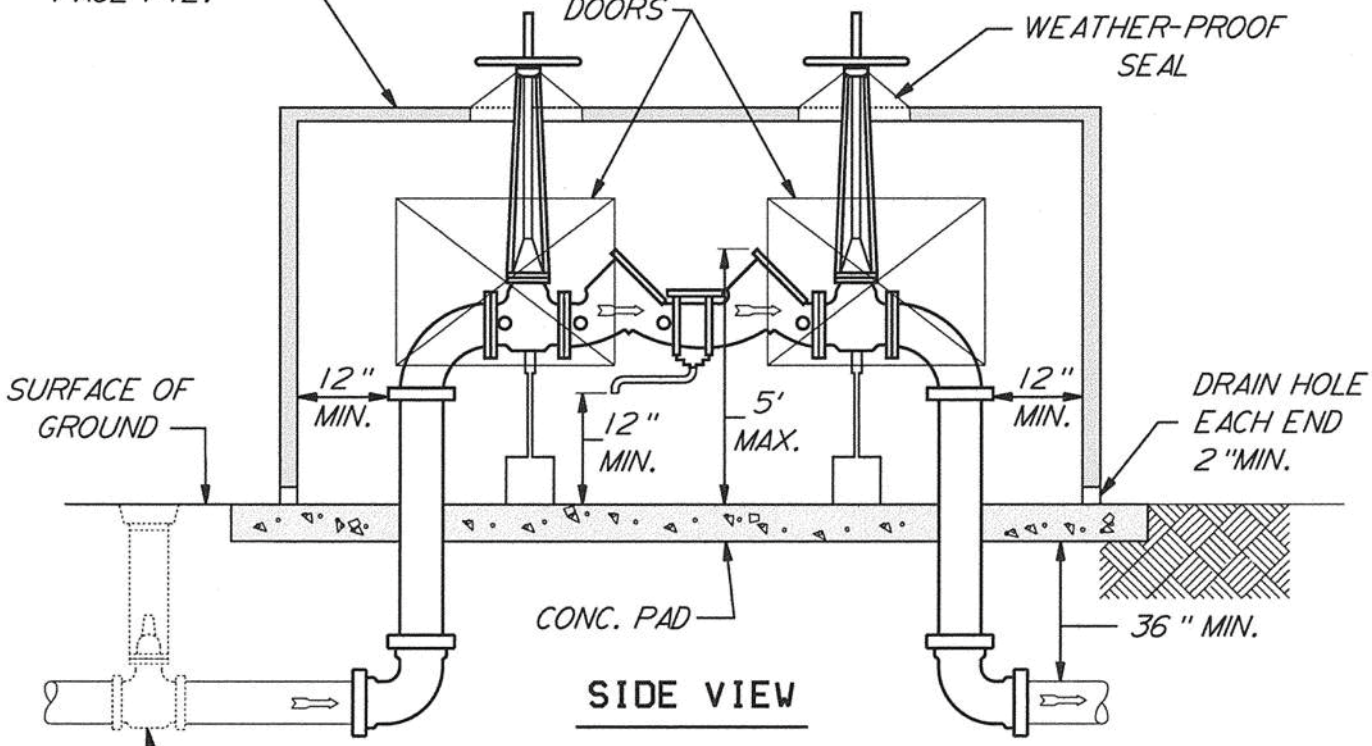


SIDE VIEW

LINE VALVE REQUIRED WHEN BACKFLOW PREVENTION DEVICE IS INSTALLED ON WATER LINE IN FRONT OF WATER METER.

* MINIMUM CLEARANCE ONLY REQUIRED IF SHELTER IS DESIGNED FOR MAN ENTRY. A NON-MAN ENTRY SHELTER SHALL HAVE ACCESS DOORS FOR ROUTINE TESTING AND A READILY REMOVABLE COVER AS ALSO SHOWN ABOVE.

| FOR O. S. & Y. RESILIENT SEATED VALVES | OUTDOOR INSTALLATION *ABOVE GROUND ONLY* |
|---|---|

Philadelphia Water Department

# RPZ INSTALLATION

(REDUCED PRESSURE ZONE BACKFLOW PREVENTION DEVICE)

| DRAWN BY: JP | DATE: February 1998 |
|---|---|
| CHECKED BY: JC | PAGE NO. I-20 of 31 |

P064

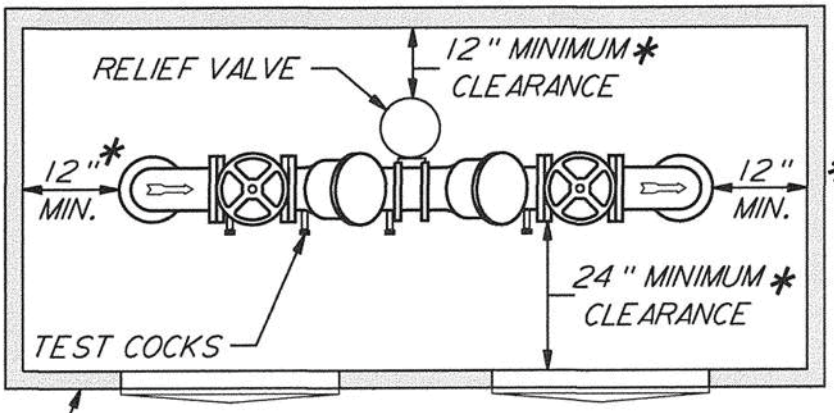


TOP VIEW

PRE-FABRICATED SHELTER SEE PAGE I-12.

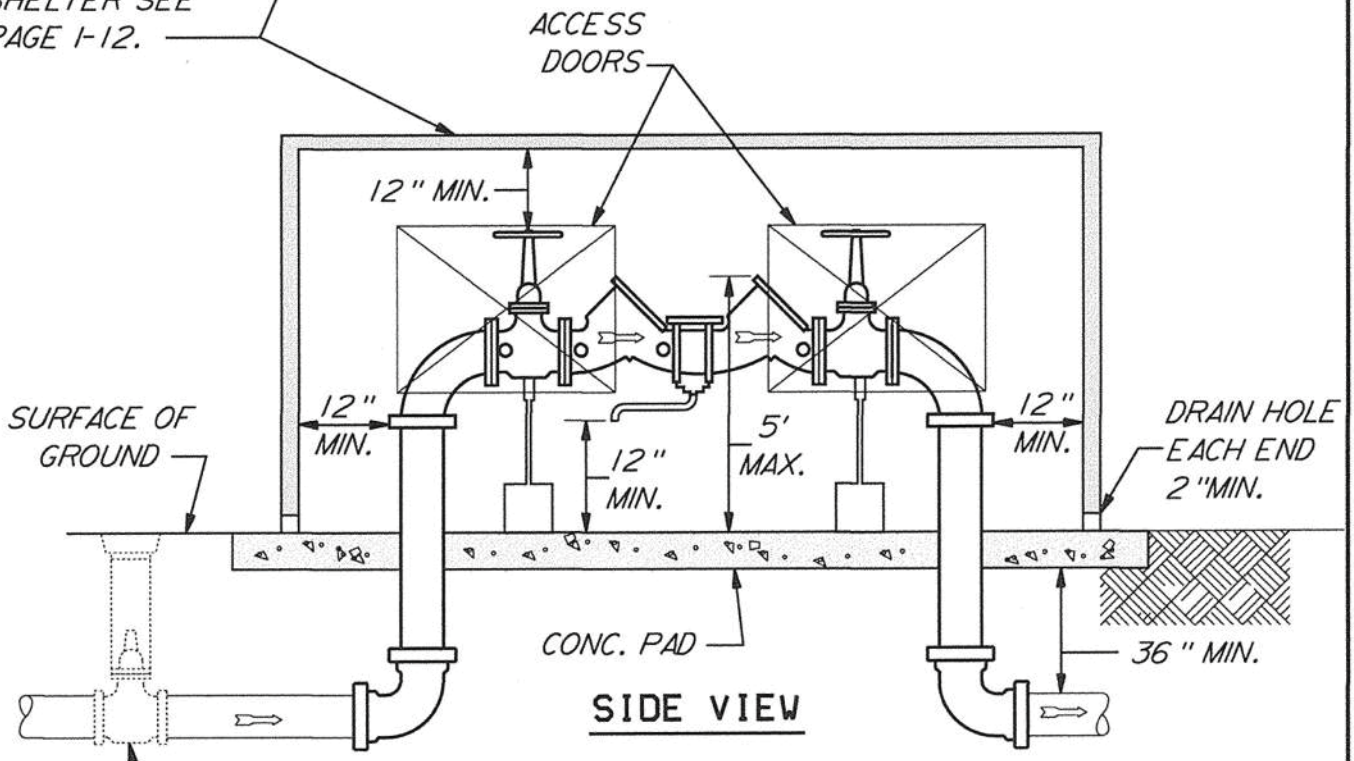


SIDE VIEW

LINE VALVE REQUIRED WHEN BACKFLOW PREVENTION DEVICE IS INSTALLED ON WATER LINE IN FRONT OF WATER METER.

* MINIMUM CLEARANCE ONLY REQUIRED IF SHELTER IS DESIGNED FOR MAN ENTRY. A NON-MAN ENTRY SHELTER SHALL HAVE ACCESS DOORS FOR ROUTINE TESTING AND A READILY REMOVABLE COVER AS ALSO SHOWN ABOVE.

| FOR N. R. S. RESILIENT SEATED VALVES | OUTDOOR INSTALLATION *ABOVE GROUND ONLY* |
|---|---|

Philadelphia Water Department

# RPZ INSTALLATION

(REDUCED PRESSURE ZONE BACKFLOW PREVENTION DEVICE)

| | | | |
|---|---|---|---|
| DRAWN BY: | JP | DATE: | February 1998 |
| CHECKED BY: | JC | PAGE NO. | I-21 of 31 |

PG5A

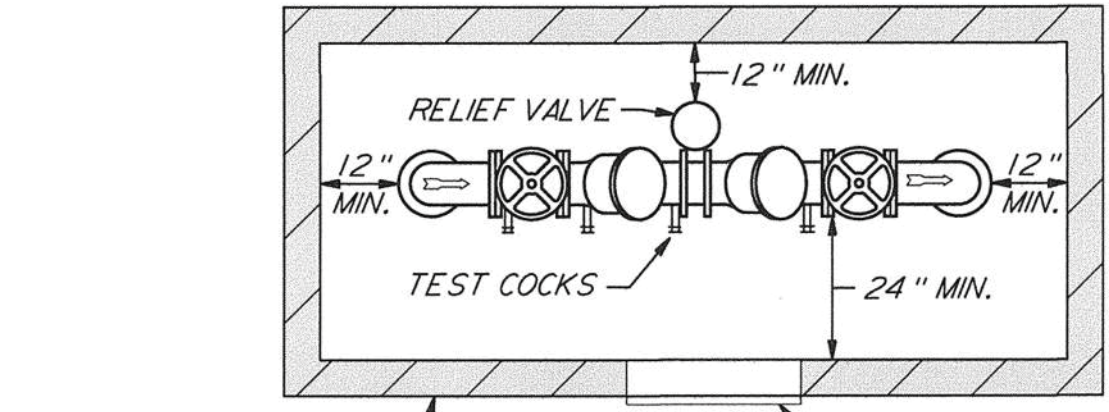


TOP VIEW

PRECAST OR CAST-IN-PLACE CONCRETE SHELTER SEE PAGE I-13.

STEEL ACCESS DOOR SUITABLE TO OWNER

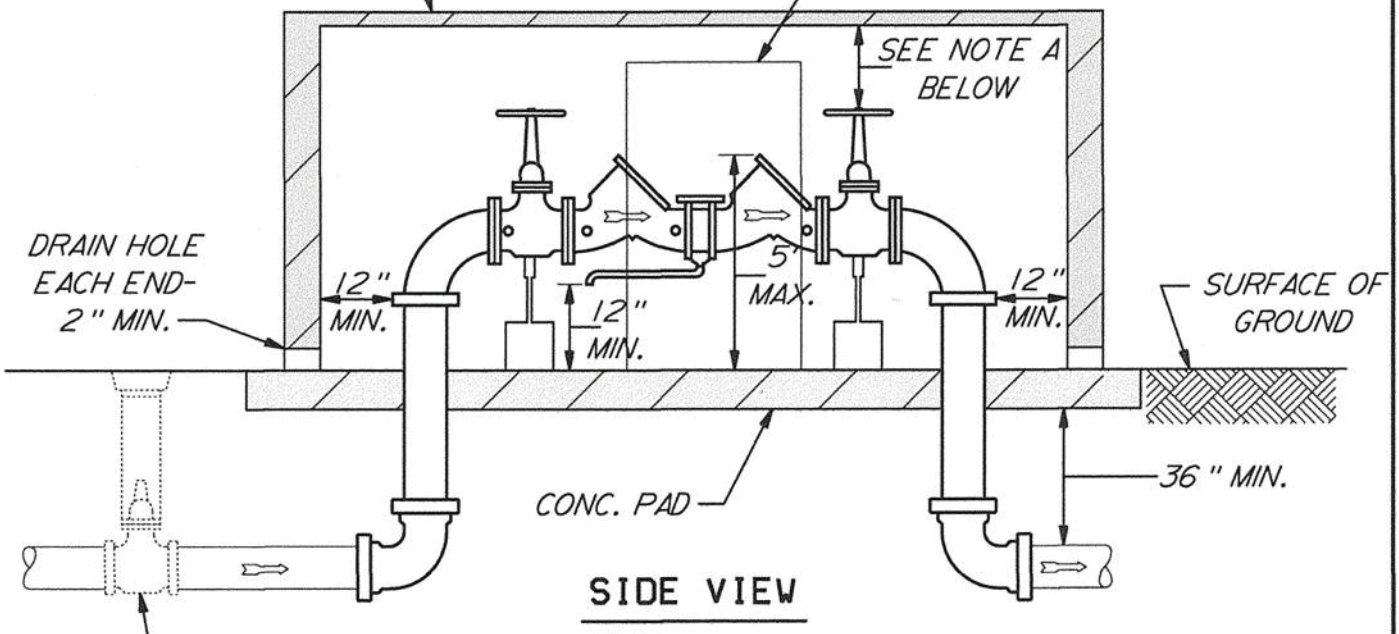


SIDE VIEW

LINE VALVE REQUIRED WHEN BACKFLOW PREVENTION DEVICE IS INSTALLED ON WATER LINE IN FRONT OF WATER METER.

NOTE A: VALVE HEADROOM REQUIREMENTS:
N.R.S. - 12 "MIN. TO TOP OF WHEEL.
O.S.& Y. - 3 "MIN. TO TOP OF FULLY EXTENDED STEM.

| FOR N. R. S. OR O. S. & Y. RESILIENT SEATED VALVES | OUTDOOR INSTALLATION *ABOVE GROUND ONLY* |
|---|---|

Philadelphia Water Department

# RPZ INSTALLATION

(REDUCED PRESSURE ZONE BACKFLOW PREVENTION DEVICE)

| | | | |
|---|---|---|---|
| DRAWN BY: | JP | DATE: | February 1998 |
| CHECKED BY: | JC | PAGE NO. | I-22 of 31 |

PG4A

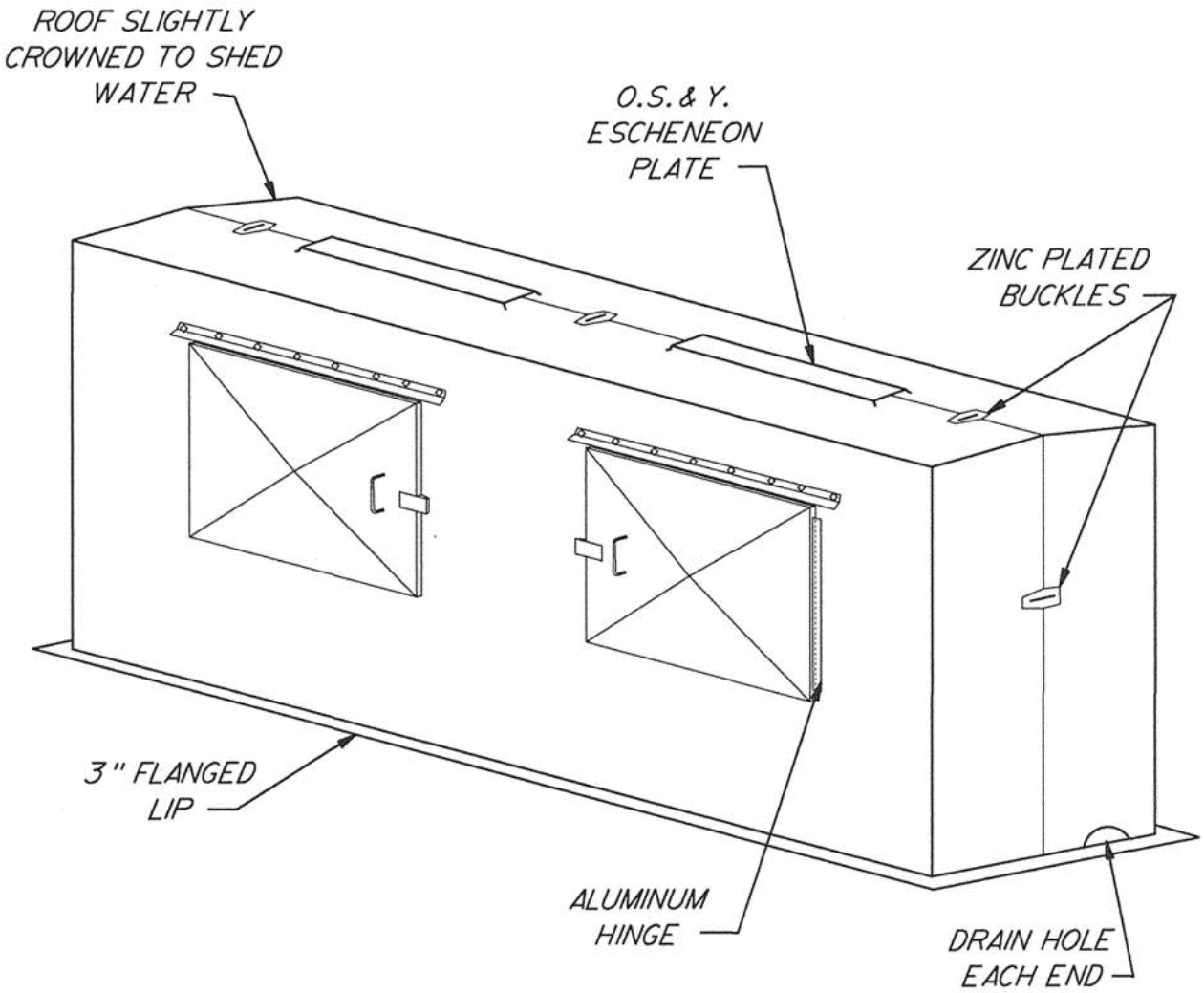


*A Pre-fabricated Shelter Must Provide Access For Routine Testing And Maintenance As Well As Protection Against Freezing And Vandalism.*

# OUTDOOR INSTALLATION
## *ABOVE GROUND ONLY*

Philadelphia Water Department

## EXAMPLE OF COMMERCIALLY AVAILABLE PRE-FABRICATED SHELTER

| | | | |
|---|---|---|---|
| DRAWN BY: | JP | DATE: | February 1998 |
| CHECKED BY: | JC | PAGE NO. | I-23 of 31 |

PG154

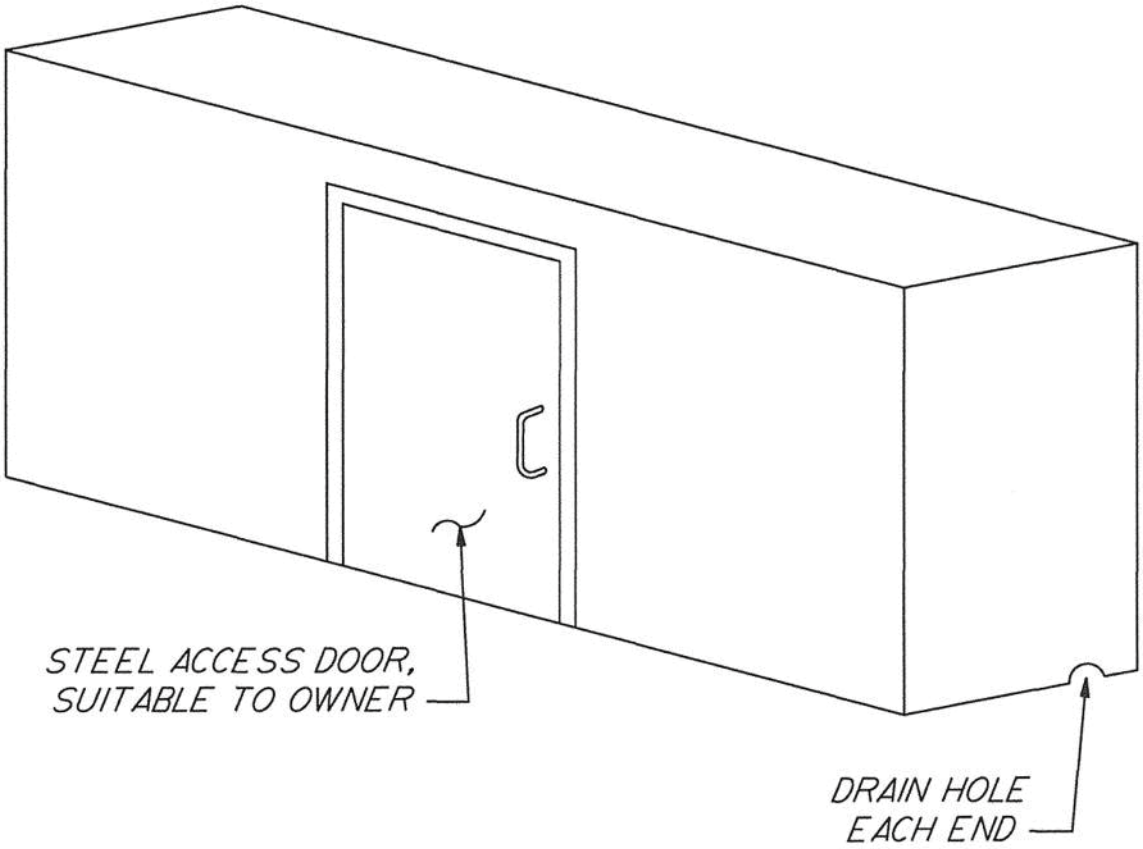


*A Pre-cast Or Cast-In-Place Concrete Shelter Must Provide Access For Routine Testing And Maintenance As Well As Protection Against Freezing And Vandalism.*

# OUTDOOR INSTALLATION
## *ABOVE GROUND*

Philadelphia Water Department

## EXAMPLE OF PRE-CAST AND CAST-IN-PLACE CONCRETE SHELTER

| | | | |
|---|---|---|---|
| DRAWN BY: | JP | DATE: | February 1998 |
| CHECKED BY: | JC | PAGE NO. | I-24 of 31 |

PG16A

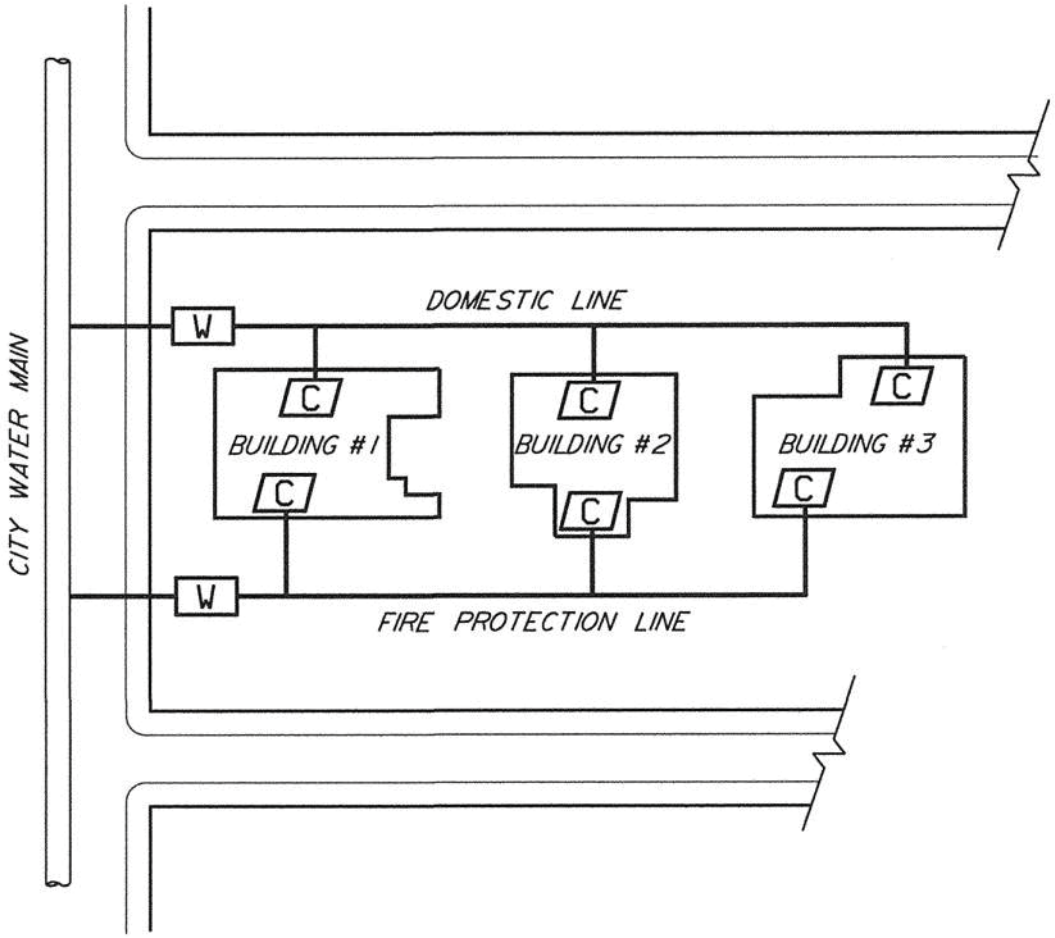


## LEGEND:

[W] Water Department Required Containment Device.

[C] L&I And/Or Health Department Required Backflow Prevention Device (i.e. RPZ or DCV) To Be Installed On The Branch Line.

# BACKFLOW PROTECTION FOR DOMESTIC & FIRE WATER SERVICES ON PRIVATE MAINS

Philadelphia Water Department

# NEW CONSTRUCTION

| | | | |
|---|---|---|---|
| DRAWN BY: | JP | DATE: | February 1998 |
| CHECKED BY: | JC | PAGE NO. | I-25 of 31 |

PG/9A

## Example (A)

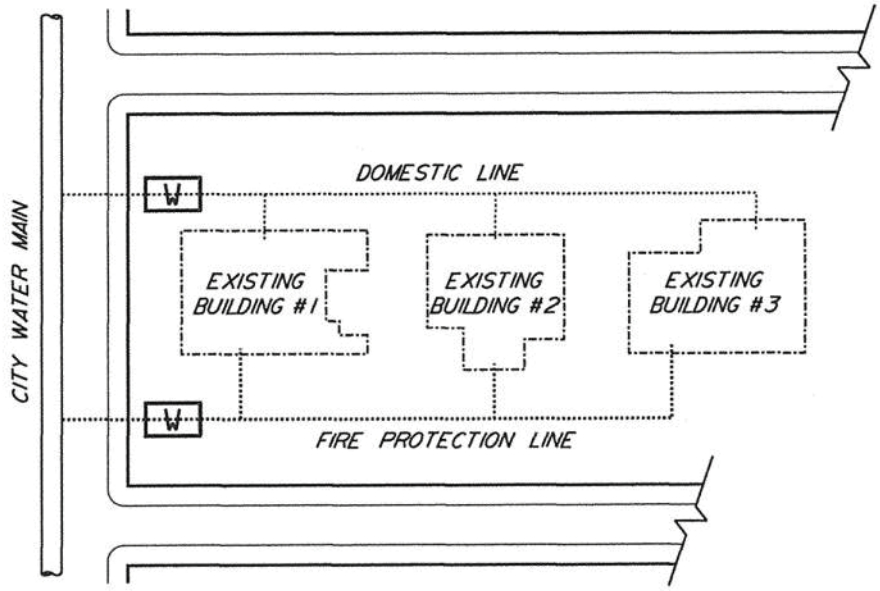


## Example (B)

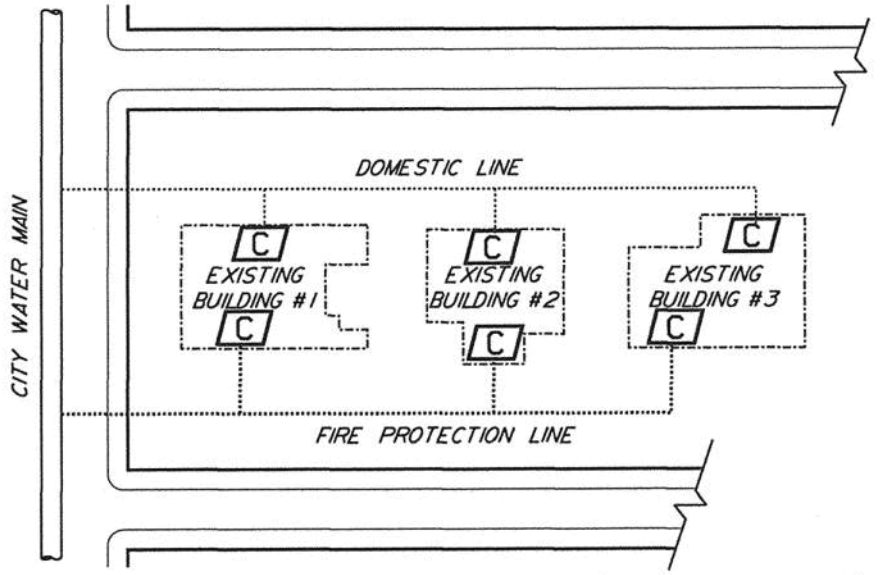


Where Possible A Containment Device Shall Be Installed On The Common Domestic Line Or Fire Protection Line Close To The City Water Main [W] . If Construction Causes Siting Problems, The Installation Of A Backflow Prevention Device (i.e. RPZ or DCV) At Each Branch Line [C] To The Building May Satisfy The Water Department's Regulations (Note: An RPZ Is The Only Acceptable Device To Be Installed At The Domestic Branch).

LEGEND:

[W] Water Dept. Required Containment Device.

[C] L&I And/Or Health Dept. Required Backflow Prevention Device (i.e. RPZ or DCV) To Be Installed On The Branch Line.

# RETRO-FITTING EXISTING DOMESTIC & FIRE WATER SERVICES FOR BACKFLOW PROTECTION ON PRIVATE MAINS

Philadelphia Water Department

# EXISTING FACILITIES

| | | | |
|---|---|---|---|
| DRAWN BY: | JP | DATE: | February 1998 |
| CHECKED BY: | JC | PAGE NO. | I-26 of 31 |

PG18A

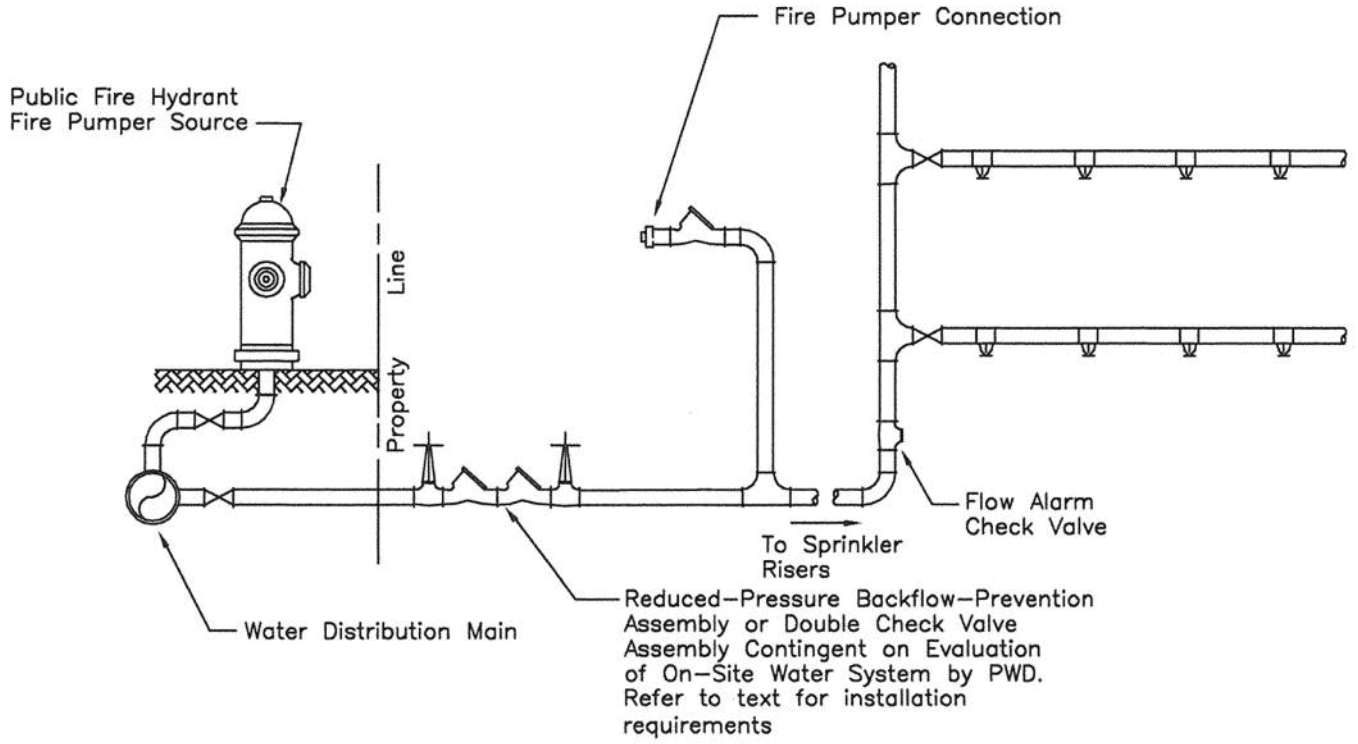


Typical Installation Of
Approved Backflow Protection

Illustration No.1

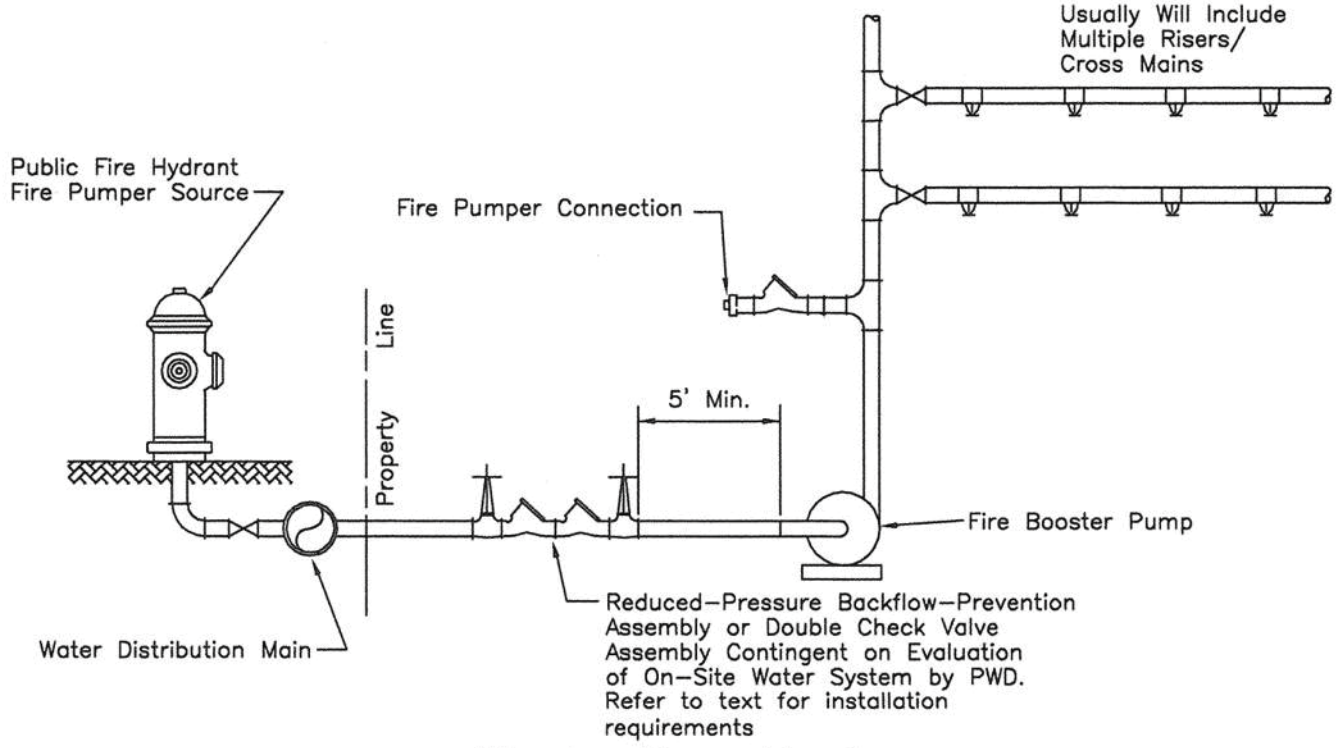


Illustration No.2

*These illustrations MUST NOT be used for the installation of Fire Protection Components, refer to City Fire Code for details.*

Philadelphia Water Department

# FIRE SYSTEMS CONTAINMENT

| | | | |
|---|---|---|---|
| DRAWN BY: | JP | DATE: | February 1998 |
| CHECKED BY: | JC | PAGE NO. | I–27 OF 31 |

CC941.DWG

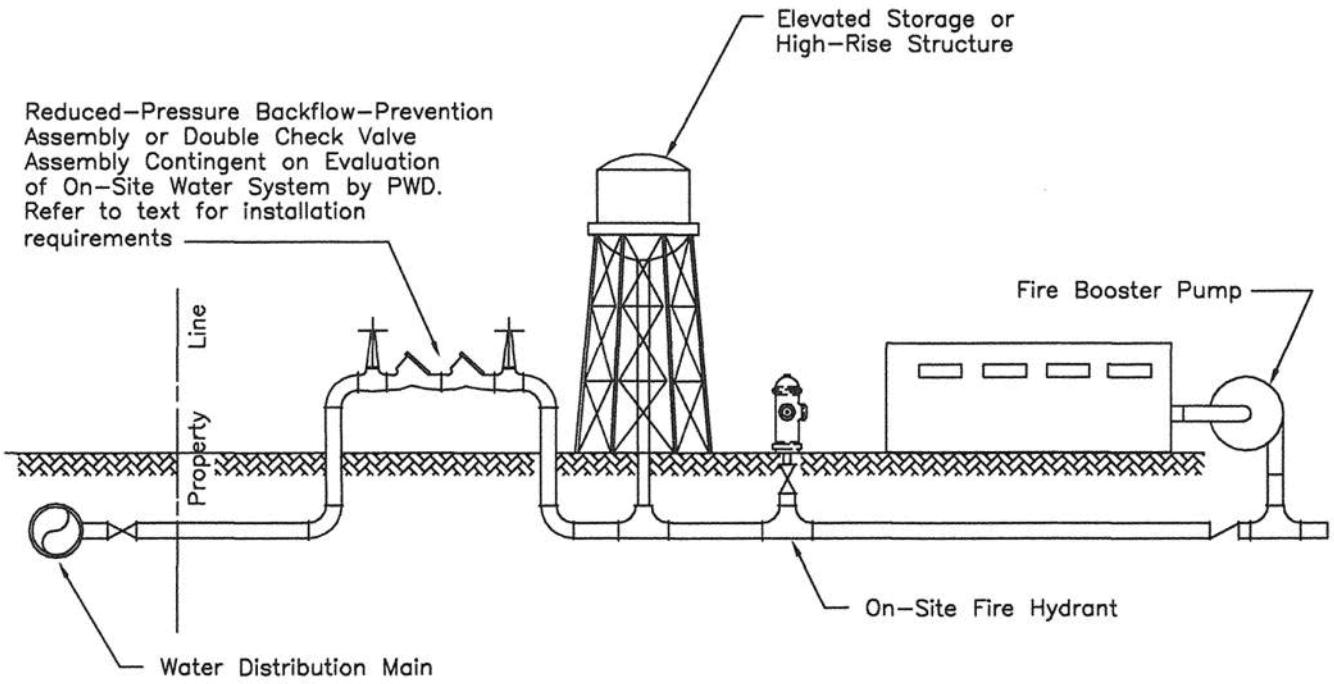


Typical Backflow Protection On A System Relying On Elevated Storage And/Or Pumping System

Illustration No.3

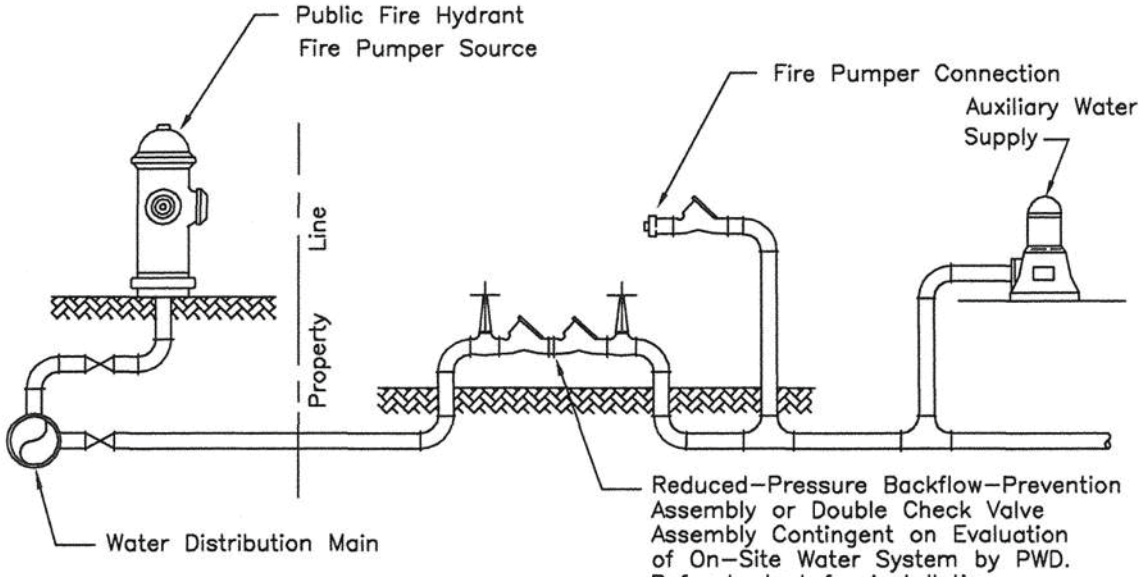


Illustration No.4

*These illustrations MUST NOT be used for the installation of Fire Protection Components, refer to City Fire Code for details.*

Philadelphia Water Department

# FIRE SYSTEMS CONTAINMENT

| | | | |
|---|---|---|---|
| DRAWN BY: | JP | DATE: | February 1998 |
| CHECKED BY: | JC | PAGE NO. | I–28 OF 31 |

CC941.DWG

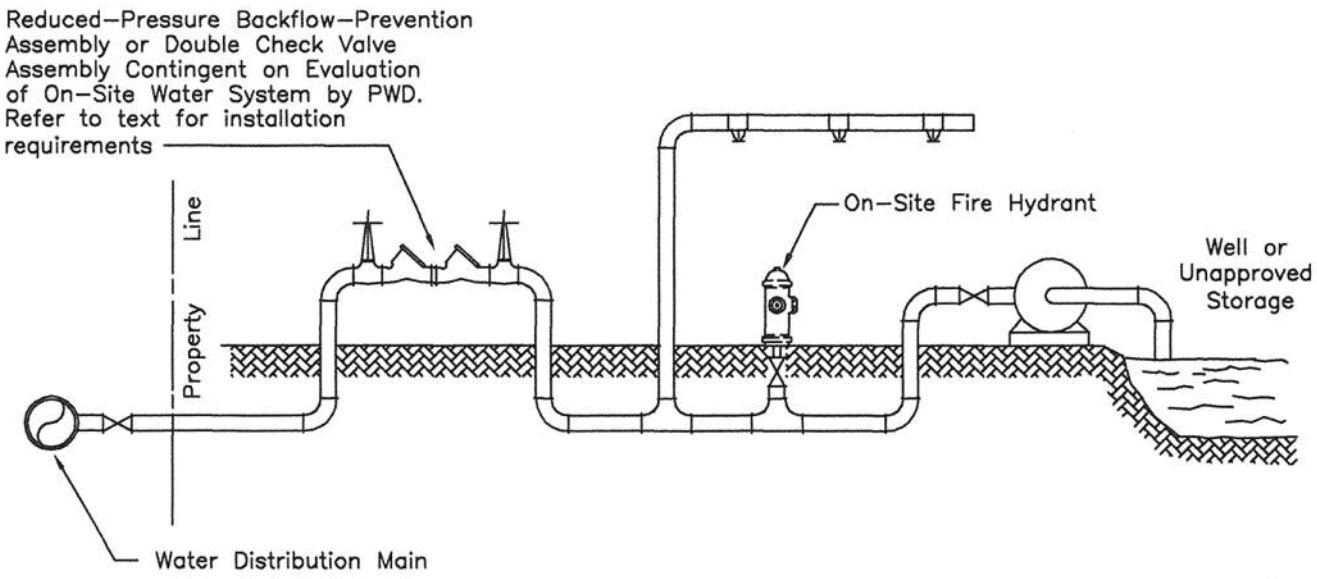


Typical Backflow Protection On A Fire System With An Unapproved Secondary Source

Illustration No.5

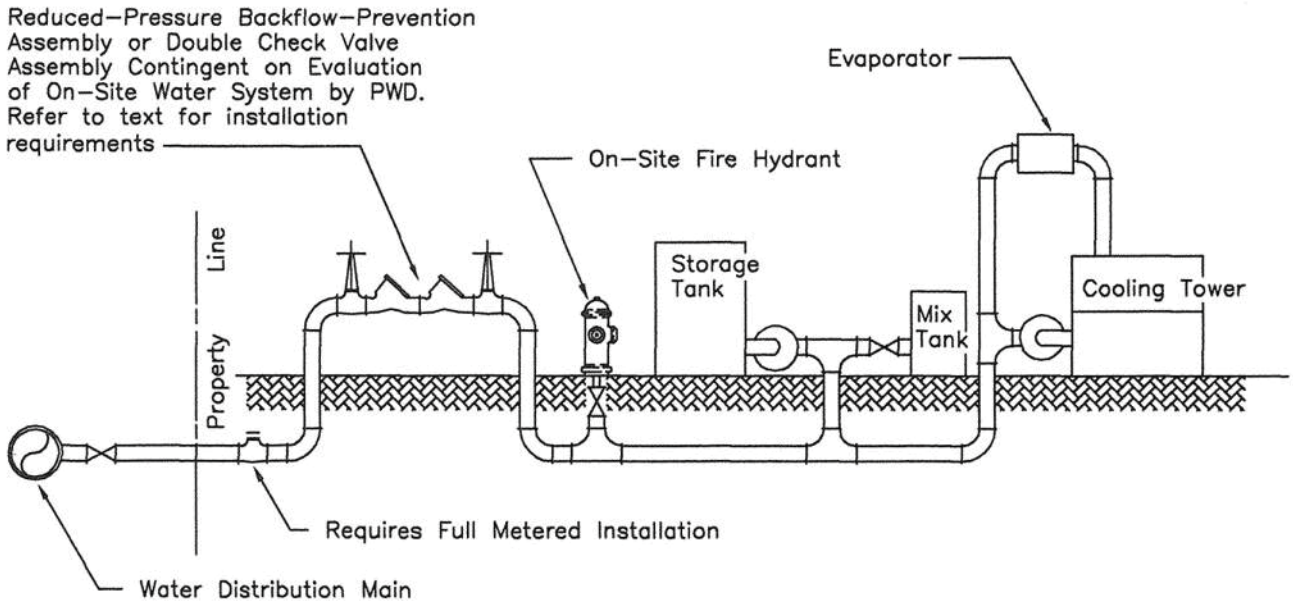


Typical Backflow Protection On A Combined Fire And Industrial Water System Supplied From The City Service Water Main

Illustration No.6

*These illustrations MUST NOT be used for the installation of Fire Protection Components, refer to City Fire Code for details.*

Philadelphia Water Department

# FIRE SYSTEMS CONTAINMENT

| | | | |
|---|---|---|---|
| DRAWN BY: | JP | DATE: | February 1998 |
| CHECKED BY: | JC | PAGE NO. | I–29 OF 31 |

CC941.DWG

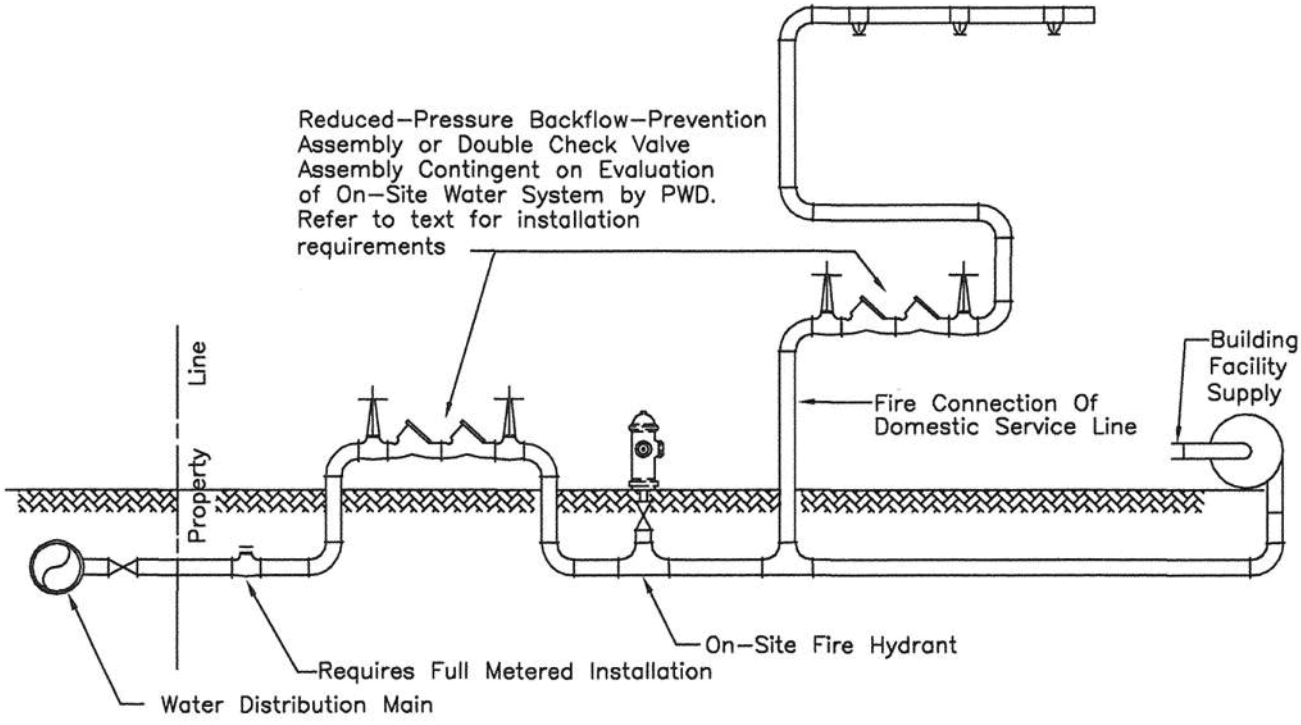


Illustration No.7

*These illustrations MUST NOT be used for the installation of Fire Protection Components, refer to City Fire Code for details.*

Philadelphia Water Department

# FIRE SYSTEMS CONTAINMENT

| | | | |
|---|---|---|---|
| DRAWN BY: | JP | DATE: | February 1998 |
| CHECKED BY: | JC | PAGE NO. | I–30 OF 31 |

CC941.DWG

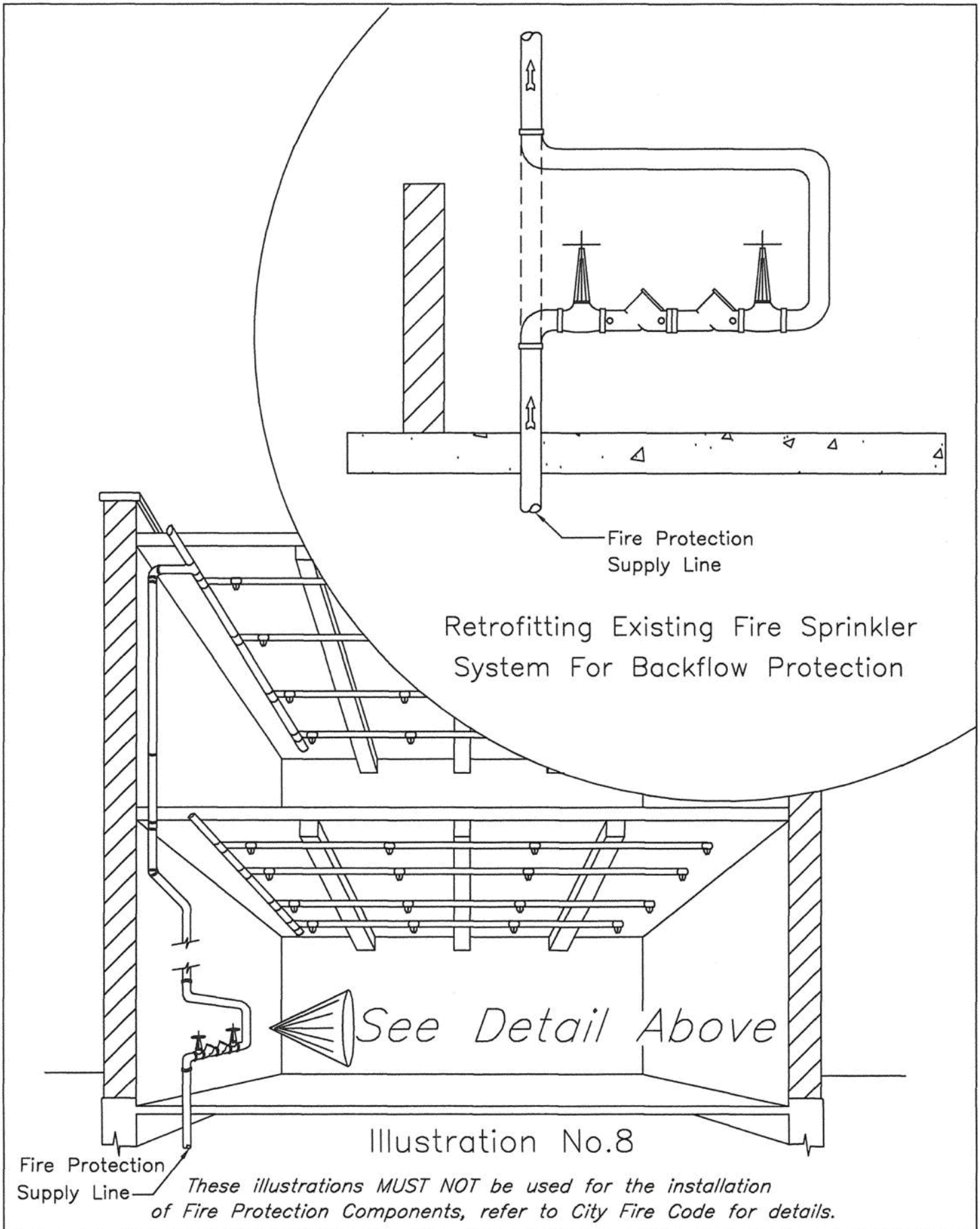


Illustration No.8

*These illustrations MUST NOT be used for the installation of Fire Protection Components, refer to City Fire Code for details.*

Philadelphia Water Department

# FIRE SYSTEMS CONTAINMENT

| | | | |
|---|---|---|---|
| DRAWN BY: | GM | DATE: | February 1998 |
| CHECKED BY: | JC | PAGE NO. | I–31 OF 31 |

CC941.DWG

# METER INSTALLATION STANDARDS

In general met pits are to be in an off-street location within 35 feet of the property line and where only occasional H-20 loading is encountered. Metering Plans for all meter installations 1½" and above regardless of location must be submitted to the Meter shop for approval before work begins.
Send plans to:

**PHILADELPHIA WATER DEPARTMENT**
**METER DIVISION**
**29TH & CAMBRIA STREETS**
**PHILADELPHIA, PA 19132**

**(MACHANICAL)**

**BACKFLOW PREVENTERS** as required by the PWD Cross Connection Control Manual, shall be located downstream of the meter within the building. Where existing conditions prohibit such, a DCV can be put in a meter pit; however an RPZ must be above grade. Refer to the Manual for backflow installation details. Questions regarding backflow protection should be directed to:

**PHILADELPHIA WATER DEPARTMENT**
**CROSS CONNECTION CONTROL UNIT**
**1500 E. HUNTING PARK AVENUE**
**PHILADELPHIA, PA 19124-4941**
**(215) 685-1419/1420**

WATER METERS are furnished and installed by the Water Dept. The cost is covered in the fee charged for a water permit.

WATER METERS SHALL BE CONNECTED TO THE SERVICE PIPE WITH:

- coppersetters (for meters 5/8" - 1")
- flanges (oval) (for meters 1-1/2" - 2")
- flanges (for meters 3" - 10")

SERVICE PIPE

- ¾"-2" diameter service pipe shall be copper, type K, meeting ASTM B 88
- 3"-10" diameter service pipe shall be ductile iron flanged pipe in accordance with ANSI/AWWA C115/A21.15

FLANGES (OVAL) shall be used as companion flanges for 1-1/2" - 2" meters. Flanges shall be produced of bronze and shall be faced, drilled and tapped in conformance with ANSI B 2.1. Flange dimensions shall conform to AWWA C700.

FLANGED FITTINGS shall be produced of ductile iron and conform to the applicable requirements for ductile iron fittings specified in ANSI/AWWA C110/A21.10

FLANGES of both ductile iron flanged pipe and fittings shall be adequate for water service of 250 PSI working pressure. The bolt circle and bolt holes of the flanges shall match those of the class 125 flanges shown in ANSI B 16.1.

NUTS AND BOLTS shall be in accordance with ASTM standard A 193-B7 and A 194, grade 4.

GASKETS shall be 1/8" thick and made of either SBR or neoprene rubber meeting the material requirements of ANSI/AWWA C111/A21.11 mechanical joint gaskets.

GATE VALVES shall be suitable for water service of 150 PSI working pressure and shall be in accordance with AWWA C500.

| APPROVED | PHILADELPHIA WATER DEPARTMENT | SCALE: N. T. S. | DATE: |
|---|---|---|---|
| CHIEF, DESIGN BRANCH<br>MANAGER METER SHOP | METER INSTALLATION NOTES | DWG. NO. 1 | |

(STRUCTURAL)

Meter pits and accessories shall be tested and registered with the quality certification staff in accordance with the quality certification standard QC-1 for precast concrete products. The meter pits shall be designed for H-20 loading. All precast segments shall be keyed and their joints watertight.

Precast manufacturers shall be certified in accordance with QC-1 by the Departments Quality Certification Staff. Direct requests for Q.C. certification to:

**PHILADELPHIA WATER DEPARTMENT**
**MATERIALS ENGINEERING LABORATORY**
**1500 E. HUNTING PARK AVENUE**
**PHILADELPHIA, PA 19124-4941**
**Attn: William Roscioli (215) 685-1447**

**CONCRETE shall consist of Portland cement which conforms to ASTM C150 and aggregates which conform to ASTM C33. The minimum compressive strength shall be 4000 P.S.I.**

**REINFORCING STEEL shall conform to ASTM A615 grade 60 for bars or ASTM A185 for welded wire fabric.**

**For additional information, contact the Meter Shop at 215-685-9642/9782.**

The Water Dept. will consider deviations from the meter pit standards upon request. Direct requests to:

PHILADELPHIA WATER DEPARTMENT
1101 MARKET STREET
ARA TOWER, SUITE 200, DESIGN BRANCH
PHILADELPHIA, PA 19107
215-685-6280

| REV. # | REV. DATE | APP. BY | REVISION DESCRIPTION |
|---|---|---|---|
| 1 | 3/6/97 | M. Lavery | Dwg. 1, Revised note to add additional personnel to inform for pipes 3" and above,<br>Backflow Preventer "Note" to indicate device should be downstream of meter,<br>updated address and title block. |
| 2 | 3/6/97 | M. Lavery | Dwg. 2, enlarged meter pit dimensions, increased laying lengths of pipe upstream and downstream of meter, title block, notes. |
| 3 | 3/6/97 | M. Lavery | Dwg. 3, added drawing of meter installation inside a building. |
| 4 & 5 | 3/6/97 | M. Lavery | Dwg. 4 & 5, indicated dimensions for centerline of opening, changed title block, notes. |
| 6, 7 & 8 | 3/6/97 | M. Lavery | Dwg. 6,7 & 8, changed title block. |

| APPROVED | PHILADELPHIA WATER DEPARTMENT | SCALE: N. T. S. | DATE: |
|---|---|---|---|
| CHIEF DESIGN BRANCH<br>MANAGER METER SHOP | METER INSTALLATION NOTES | DWG. NO. 1a | |

APPROVED

CHIEF DESIGN BRANCH

MANAGER METER SHOP

# PHILADELPHIA WATER DEPARTMENT

## METER PIT INSTALLATION 3" TO 10"

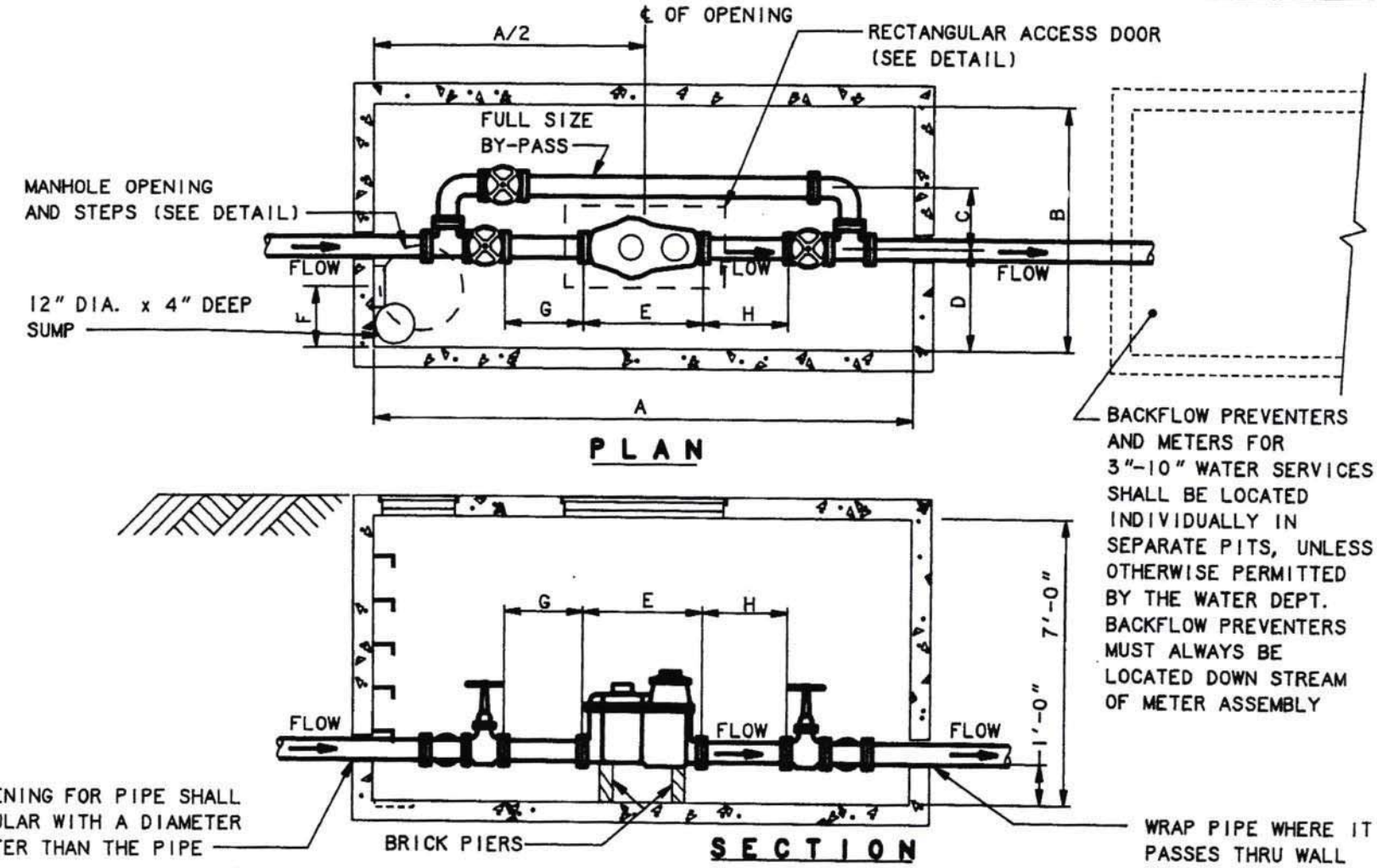


| DIMENSION | PIPE SIZE | | | | |
|---|---|---|---|---|---|
| | 3" | 4" | 6" | 8" | 10" |
| A | 9'-6" | 11'-6" | 13'-6" | 17'-0" | 18'-6" |
| B | 6'-0" | 6'-0" | 6'-0" | 8'-0" | 8'-0" |
| C | 1'-1¼" | 1'-3½" | 1'-5½" | 1'-11" | 2'-3½" |
| D | 3'-0" | 2'-8" | 2'-6" | 4'-0" | 3'-8" |
| E | 2'-½" | 2'-5½" | 3'-1" | 4'-5½" | 5'-8¾" |
| F | 1'-8" | 1'-8" | 1'-8" | 2'-6" | 2'-6" |
| G | 1'-6" | 2'-0" | 2'-6" | 3'-6" | 2'-6" |
| H | 1'-0" | 1'-6" | 1'-6" | 2'-0" | 2'-6" |

SCALE: N.T.S.

DATE:

DWG. NO. 2

APPROVED

CHIEF DESIGN BRANCH

MANAGER METER SHOP

**PHILADELPHIA WATER DEPARTMENT**

BUILDING INSTALLATION
3" TO 10"

SCALE: N.T.S.

DATE:

DWG. NO. 3

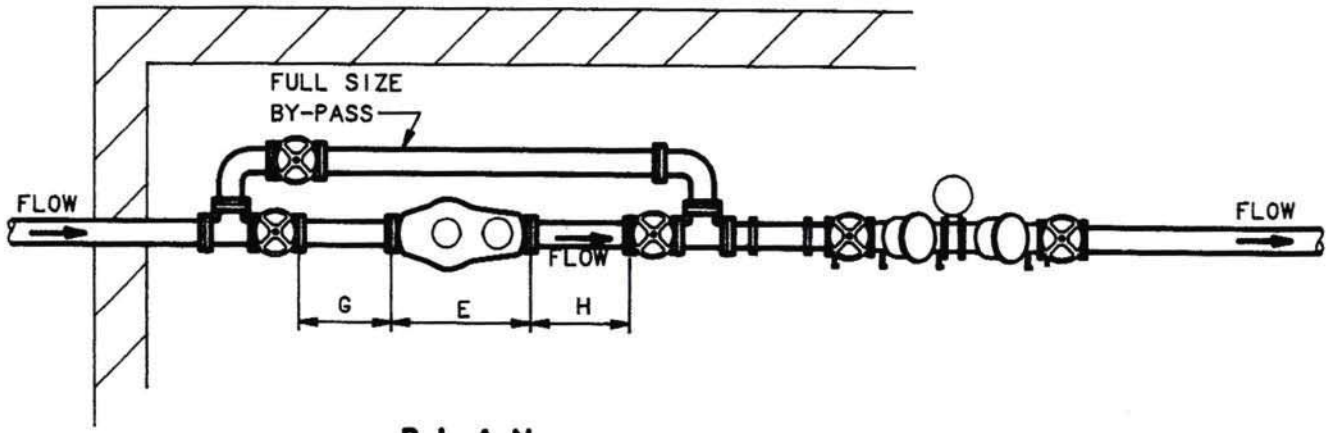


**PLAN**

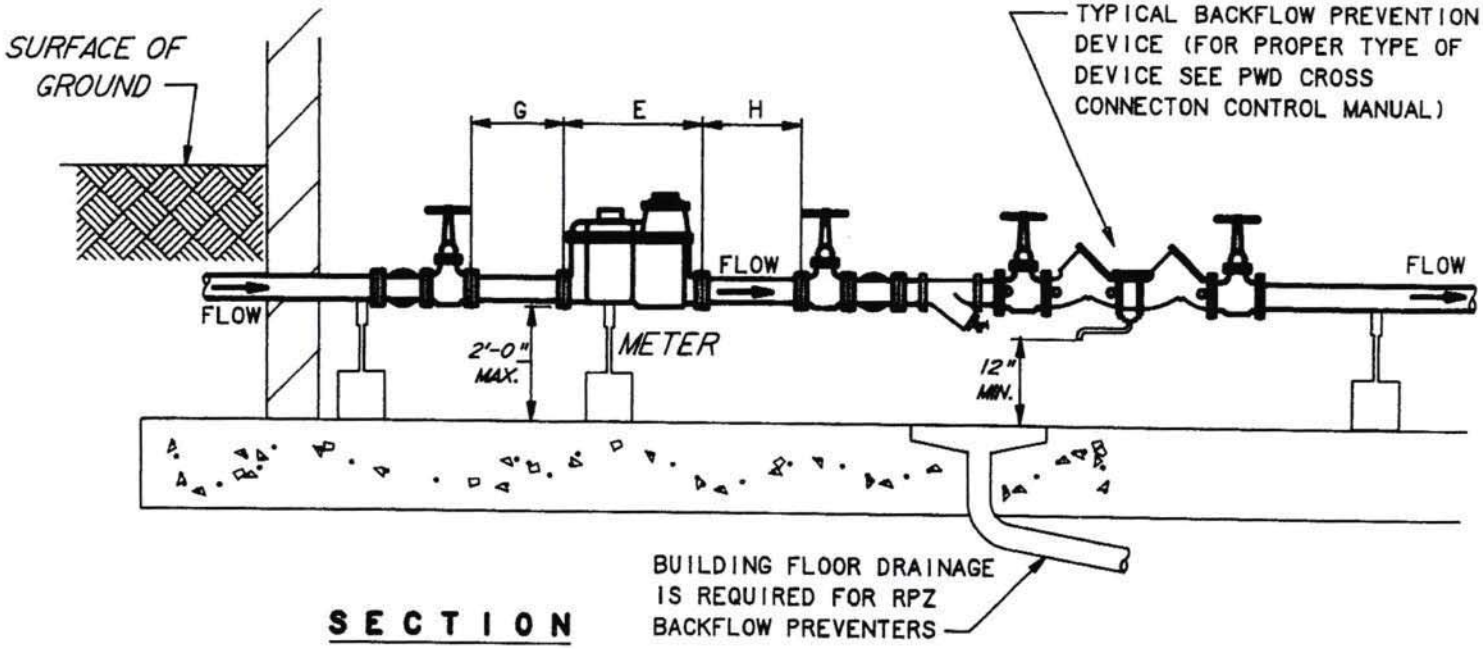


**SECTION**

| DIMENSION | PIPE SIZE | | | | |
|---|---|---|---|---|---|
| | 3" | 4" | 6" | 8" | 10" |
| E | 2'-$\frac{1}{2}$" | 2'-5$\frac{1}{2}$" | 3'-1" | 4'-5$\frac{1}{2}$" | 5'-8$\frac{3}{4}$" |
| G | 1'-6" | 2'-0" | 2'-6" | 3'-6" | 2'-6" |
| H | 1'-0" | 1'-6" | 1'-6" | 2'-0" | 2'-6" |

| DIMENSION | PIPE SIZE | |
|---|---|---|
| | 1-1/2" | 2" |
| A | 1'-1-1/2" | 1'-5" |
| B | 1'-0" | 1'-4" |

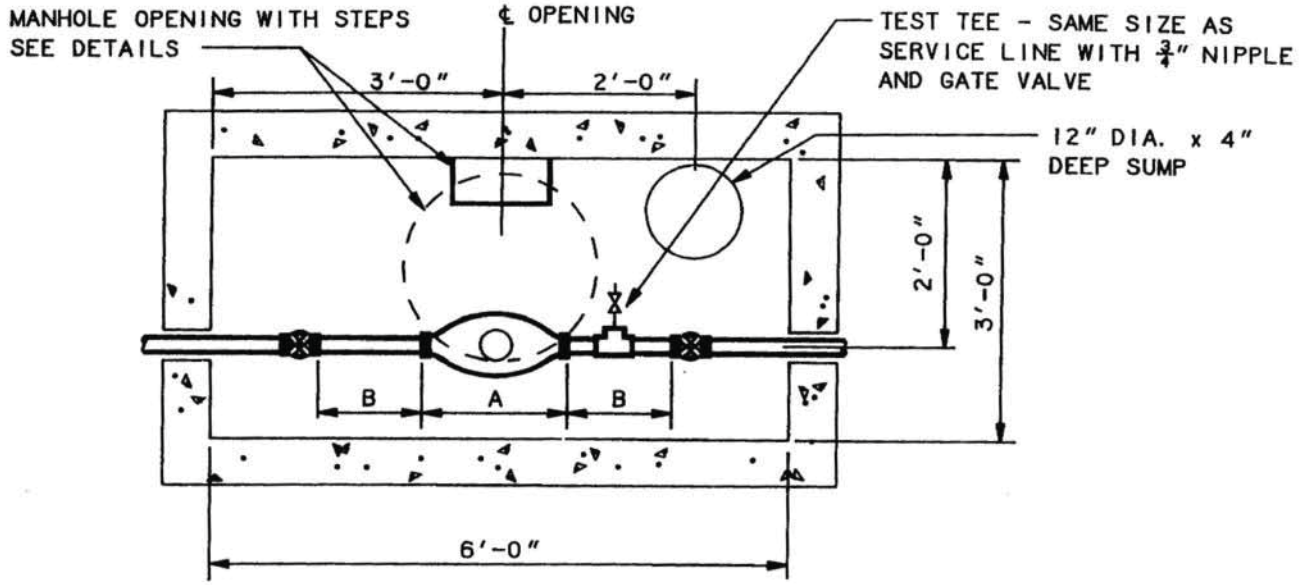


PLAN

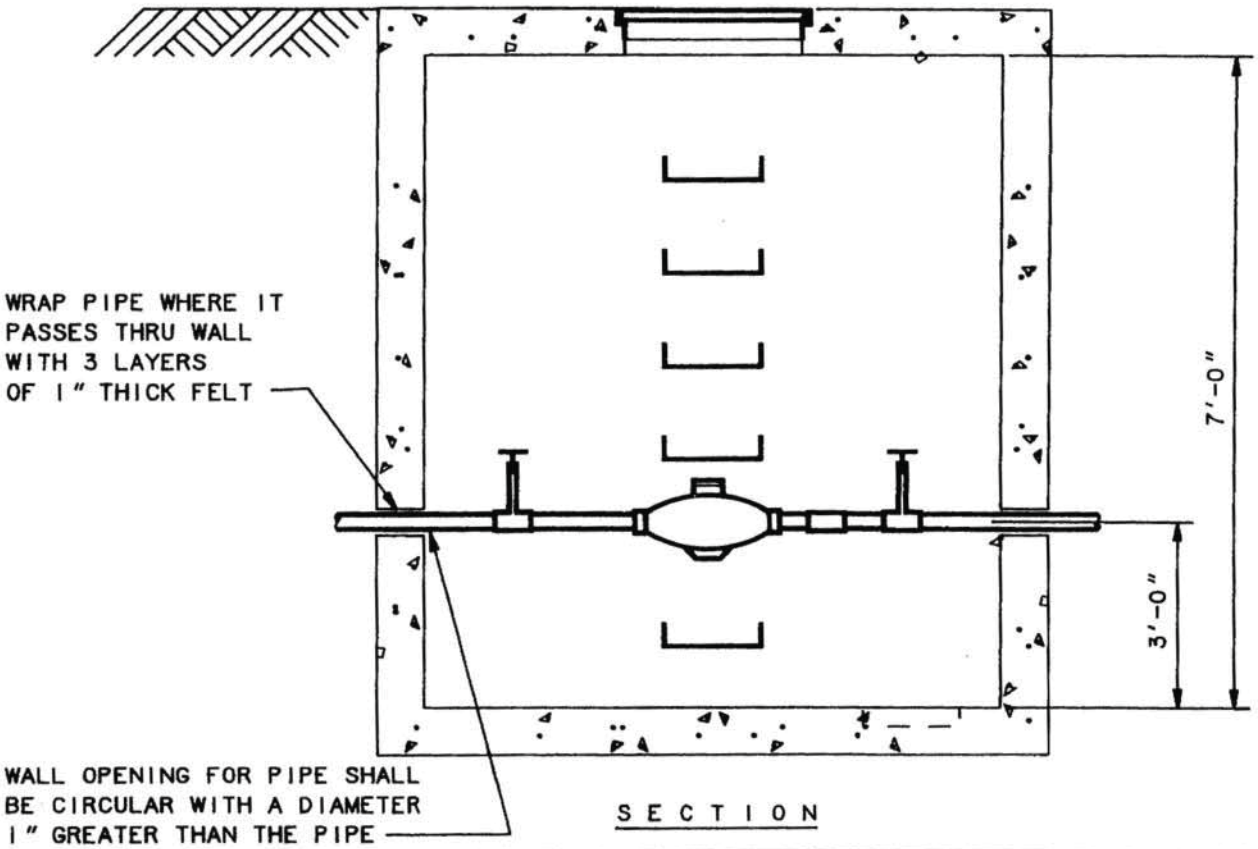


SECTION

| APPROVED | PHILADELPHIA WATER DEPARTMENT | SCALE: N. T. S. | DATE: |
|---|---|---|---|
| Stephen J. Fritek<br>CHIEF DESIGN BRANCH<br>Ernest M. Foaches<br>MANAGER METER SHOP | METER PIT INSTALLATION<br>1½" AND 2" | DWG. NO.<br>4 | |

| DIMENSION | PIPE SIZE | |
|---|---|---|
| | 1-1/2" | 2" |
| A | 1'-1-1/2" | 1'-5" |
| B | 1'-0" | 1'-0" |

TEST TEE - SAME SIZE AS SERVICE LINE WITH $\frac{3}{4}$" NIPPLE AND GATE VALVE

MANHOLE OPENING WITH STEPS SEE DETAILS

NOTE:
INSTALLATION OF BACKFLOW PREVENTERS (DOUBLE CHECK VALVE) IN METER PITS SHALL BE SUBMITTED TO THE WATER DEPT. FOR APPROVAL

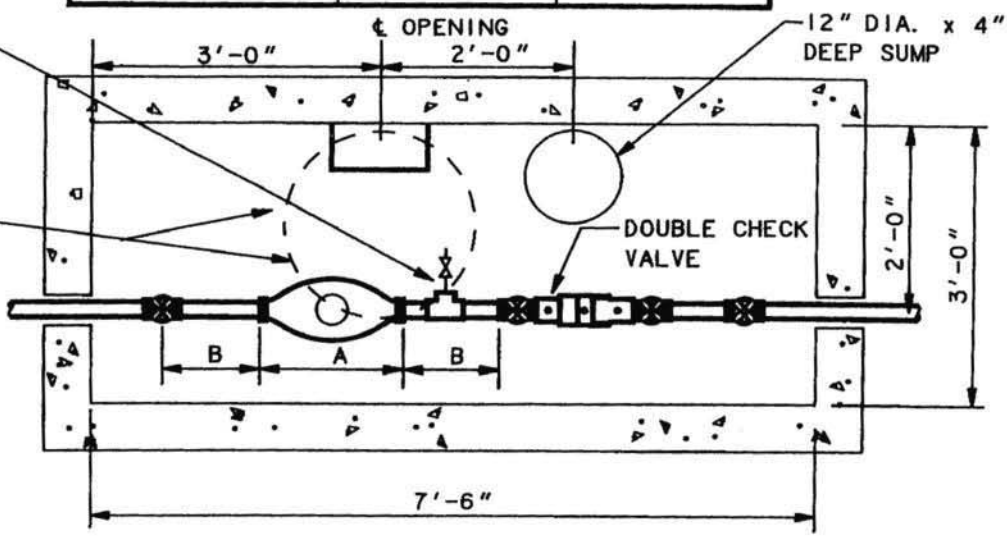


PLAN W/DOUBLE CHECK VALVE

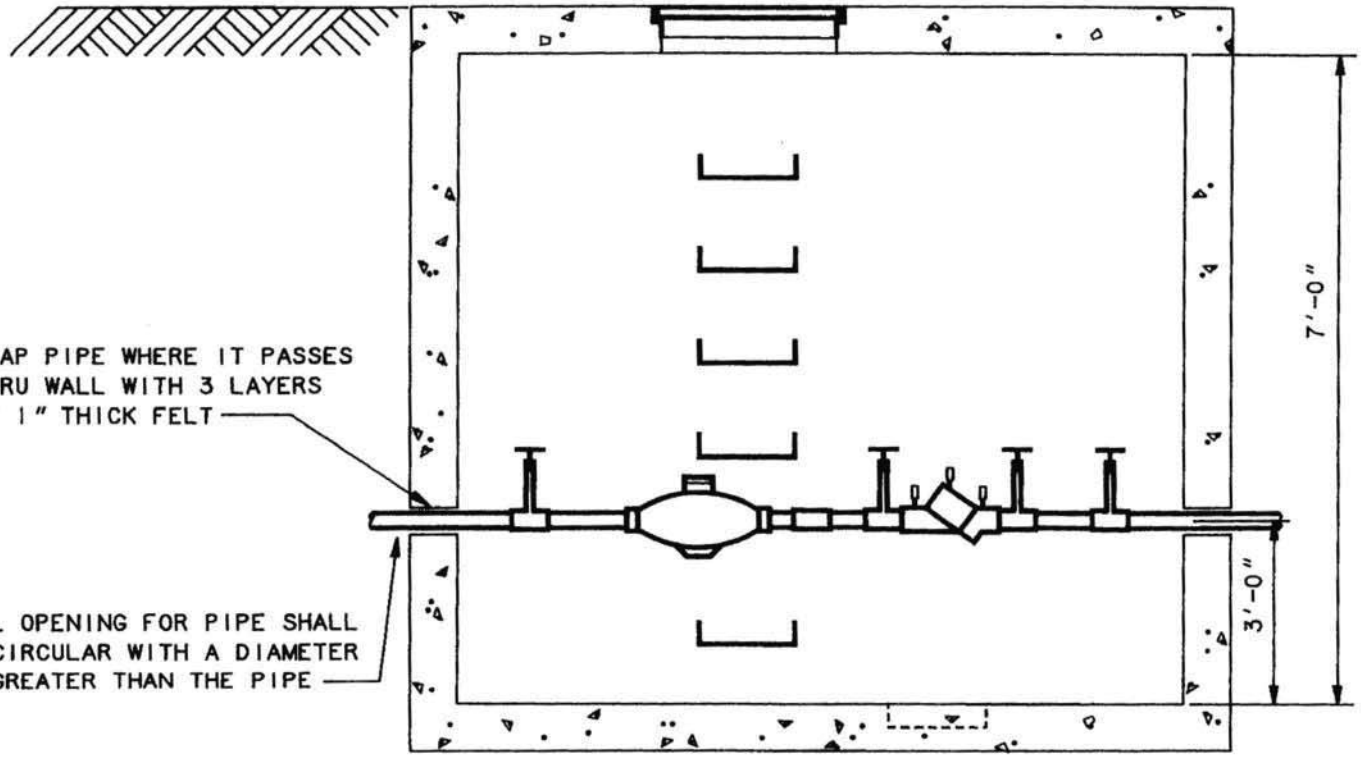


SECTION W/DOUBLE CHECK VALVE

| APPROVED | PHILADELPHIA WATER DEPARTMENT | SCALE: N. T. S. | DATE: |
|---|---|---|---|
| CHIEF DESIGN BRANCH<br>MANAGER METER SHOP | METER PIT INSTALLATION<br>$1\frac{1}{2}$" & 2" W/BACKFLOW PREVENTER | DWG. NO. | 5 |

NOTES:
LOCATE METER PIT OUTSIDE TRAFFIC LANES.

PLUMBER SHALL SPECIFY THE TYPE OF SERVICE LINE CONNECTION THE COPPERSETTER SHALL BE EQUIPPED WITH. ALSO HE IS TO SPECIFY THE EXACT LAYING LENGTH NEEDED IN THE COPPERSETTER FOR BACKFLOW PREVENTER.

WALL OPENING FOR PIPE SHALL BE CIRCULAR WITH A DIAMETER 1" GREATER THAN THE PIPE

INSTALLATION OF BACKFLOW PREVENTERS (DOUBLE CHECK VALVES) IN METER PITS SHALL BE SUBMITTED TO THE WATER DEPT. FOR APPROVAL

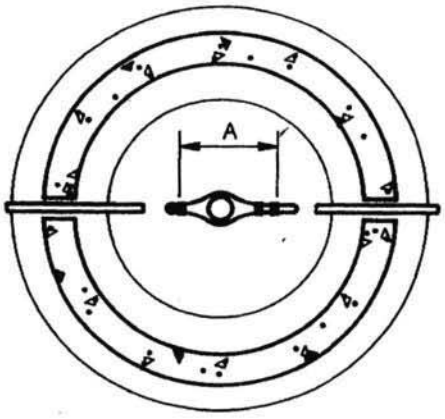


PLAN

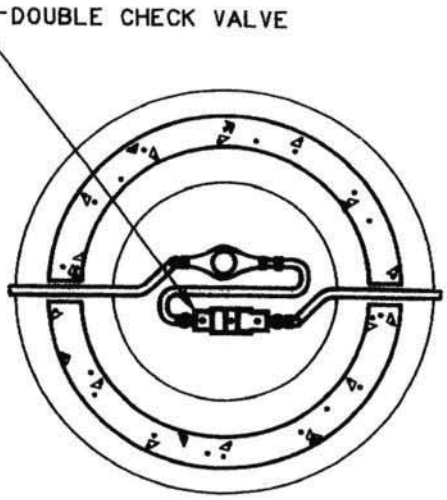


PLAN
W/DOUBLE CHECK VALVE

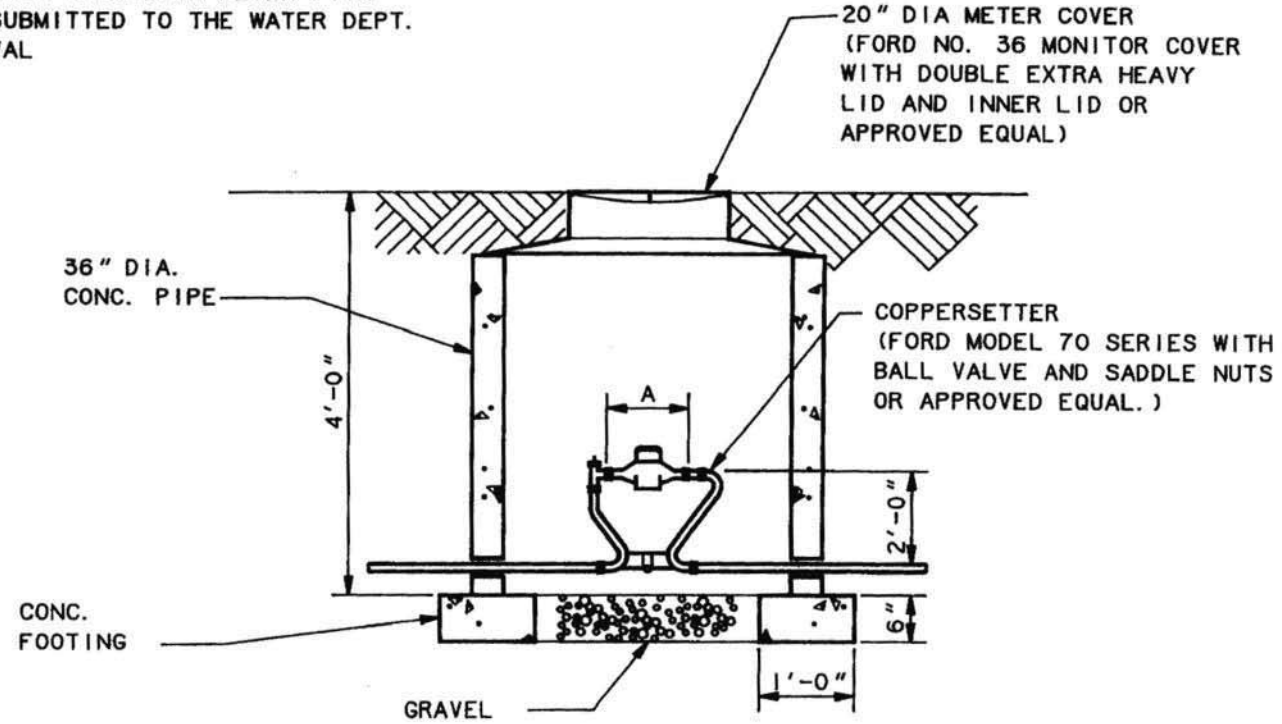


SECTION

| DIMENSION | PIPE SIZE | |
|---|---|---|
| | 5/8" | 1" |
| A | 7-1/2" | 10-3/4" |

APPROVED

CHIEF DESIGN BRANCH

MANAGER METER SHOP

# PHILADELPHIA WATER DEPARTMENT

METER PIT INSTALLATION
5/8" AND 1"

SCALE: N. T. S.

DATE:

DWG. NO.

6

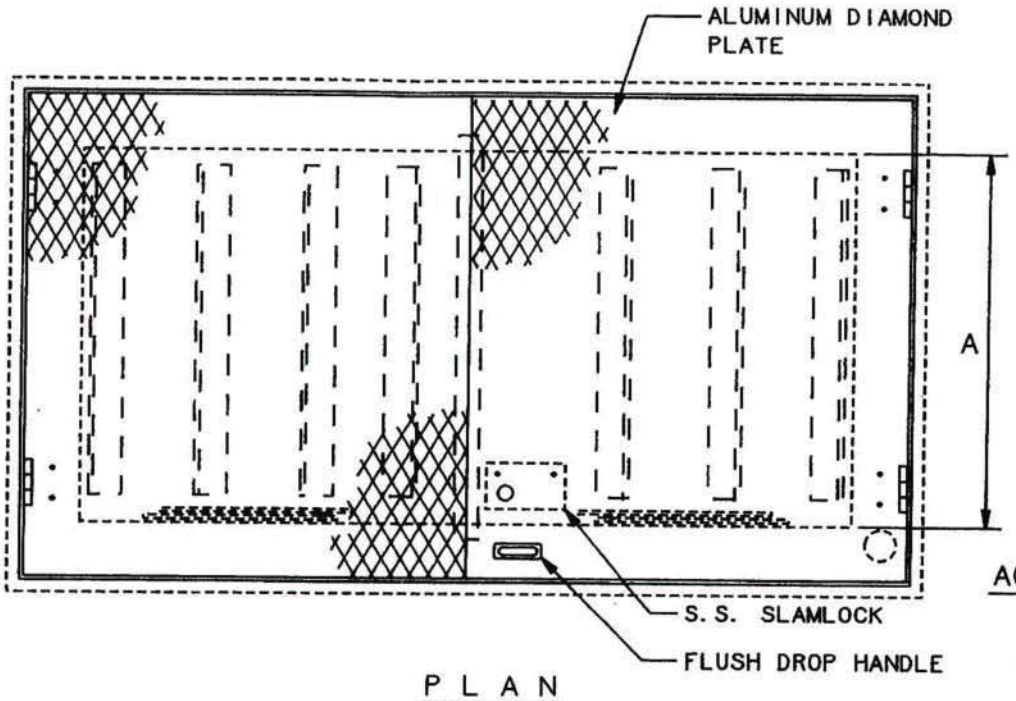


PLAN

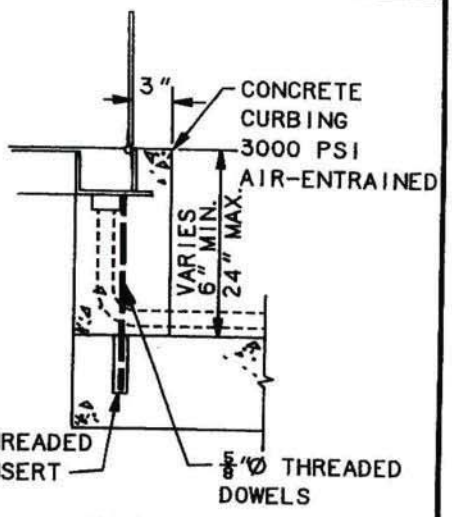


BUILT-UP
ACCESS DOOR ALTERNATIVE

| METER SIZE | DIMENSION | |
|---|---|---|
| | A | B |
| *3" | 24" | 30" |
| *4" | 24" | 36" |
| 6" | 24" | 48" |
| 8" | 30" | 48" |
| 10" | 36" | 48" |

* SINGLE LEAF DOOR

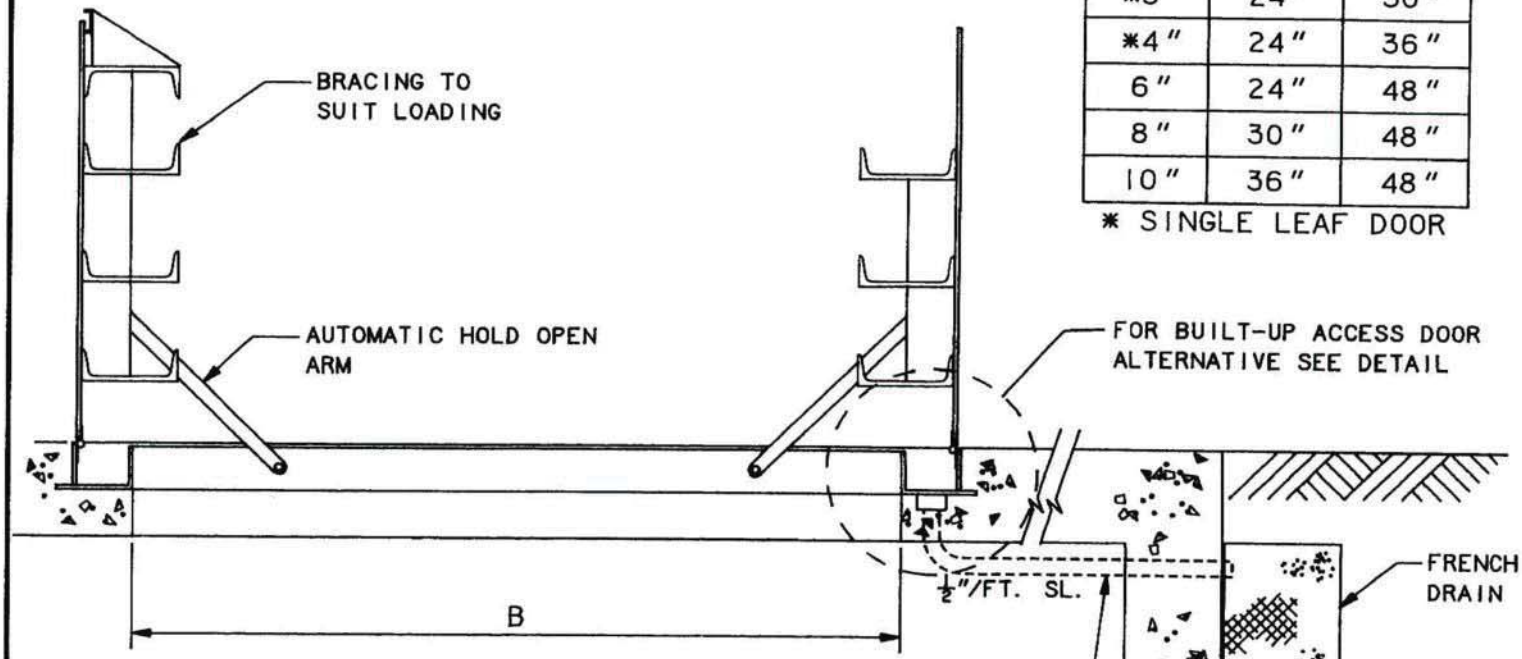


TYP. SECTION
(SINGLE LEAF DOOR SIMILAR)

NOTE:

DESIGN DOOR TO WITHSTAND H-20 LOADS WITHOUT IMPACT.

USE ALUMINUM MATERIALS FOR THE DOOR AND STAINLESS STEEL NUTS, BOLTS, AND HARDWARE

COAT DOOR SURFACES WHICH WILL CONTACT CONCRETE WITH BITUMINOUS PAINT.

| APPROVED | PHILADELPHIA WATER DEPARTMENT | SCALE: N. T. S. | DATE: |
|---|---|---|---|
| Stephen J. Fritz<br>CHIEF DESIGN BRANCH<br>Ernest M. Loachin<br>MANAGER METER SHOP | METER PIT DETAILS | DWG. NO. 7 | |

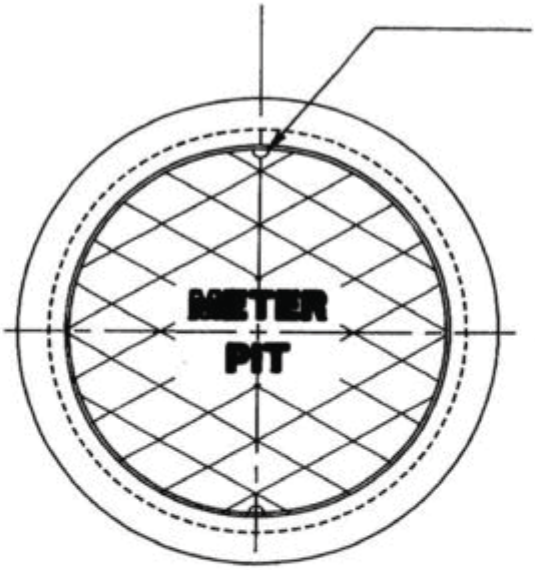


PLAN

NOTES:

MANHOLE FRAME AND COVER SHALL BE FOR HEAVY DUTY USE, MADE OF CLASS 30B GRAY IRON CONFORMING TO ASTM A48.

MACHINE FINISH FRAME SEAT, COVER SEAT, AND COVER SIDEWALL.

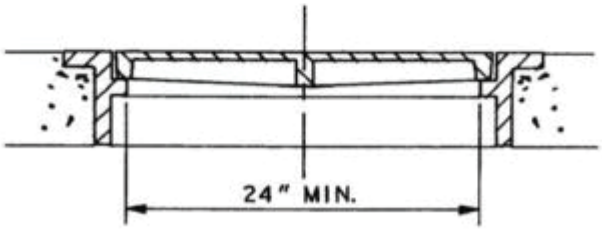


SECTION
(SLAB TYPE)

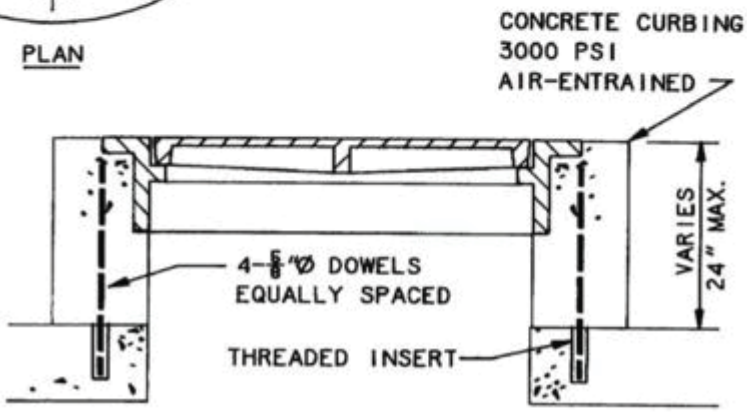


SECTION
(BUILT-UP TYPE ALTERNATIVE)

## MANHOLE FRAME AND COVER

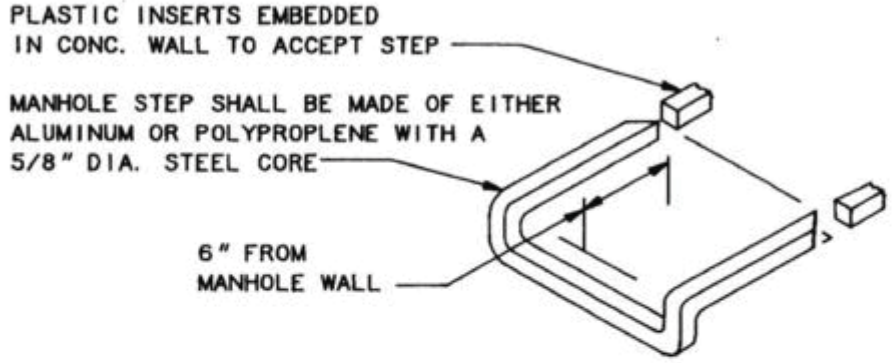


NOTES:

ALUMINUM SHALL CONFORM TO ASTM B-221 ALLOY 6061 T-6

MANHOLE STEPS SHALL SATISFY ALL REQUIREMENTS OF OSHA.

PLASTIC INSERTS SHALL CONFORM TO STEP EMBEDMENT DEPTH AS REQUIURED BY ASTM C-478, C-497.

POLYPROPLENE SHALL CONFORM TO ASTM 2146 WITH STEEL CORE CONFORMING TO ASTM A-615, GRADE 60.

## MANHOLE STEPS

| APPROVED | PHILADELPHIA WATER DEPARTMENT | SCALE: N. T. S. | DATE: |
|---|---|---|---|
| Stephen J. Fortek<br>CHIEF DESIGN BRANCH<br>Ernest M. Foachus<br>MANAGER METER SHOP | METER PIT DETAILS | DWG. NO. 8 | |